THE Car

THE MANUAL

JOPRODUCTS

WWW.JO-PRODUCTS.COM

JOPRODUCTS

THE WORDS

Producing THE Car may seem like it has been a one man mission, but it would not have been possible to get done this successfully without the help of a lot of people. I really have to thank, in no particular order:

Ari Jyvä, Aki Mertsola, Reijo Mattila, Ilias Arkoudaris, Teemu Säilä, Jimmy Storey, Philip Mörtstedt, Ari and Arto Heinonen, Maurizio Fantinel, Tomi Jermalainen, Carl Magnus Fager, Mikko Meriluoto, Arttu Kauranne, Adam Lewis, Jess Saunders, Timo and Veikko Jalas, Kauko and Kalle Kyyrö, Miika Korpela, Mikael Hellbom, Mikko Kaarela, Perttu Juntura, Samuele Lenzi, Paul Coleman, my grandparents, aunt, uncle and family, my parents, and my two sisters.

And finally a special thank you to YOU, for buying THE Car. Without customers this would not work. I sincerely hope you enjoy THE Car now and in the future. All feedback is welcome, good and bad. Lets make it even better, together.

WARNING

IMPROPER USE OF THE CAR CAN CAUSE SEVERE INJURY OR DEATH

ALWAYS USE AN APPROVED HELMET AND PROTECTIVE GEAR

NEVER USE ON PUBLIC ROADS

NEVER CARRY PASSENGERS

NEVER USE WITH DRUGS OR ALCOHOL

NEVER:

*OPERATE WITHOUT PROPER TRAINING OR INSTRUCTION

*OPERATE AT SPEEDS TOO FAST FOR YOUR SKILLS OR THE CONDITIONS

*ON PUBLIC ROADS - A COLLISION CAN OCCUR WITH ANOTHER VECHILE

*OPERATE WITH A PASSENGER - PASSENGERS AFFECT BALANCE STEERING AND INCREASE RISK OF LOSING CONTROL

*EAT THE PARTS

*TAKE CLAIMS TOO SERIOUSLY SHOWN IN THIS MANUAL

ALWAYS:

*USE PROPER RIDING TECHNIQUES TO AVOID VECHILE OVERTURNS ON HILLS AND ROUGH TERRAIN AND IN TURNS

*AVOID PAVED SURFACES - PAVEMENT MAY SERIOUSLY AFFECT HANDLING AND CONTROL

*TAKE MANUAL SERIOUSLY

REMEMBER:

*THE MANUAL MAY CONTAIN HUMOR

THE SHOCKS

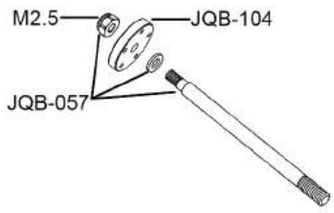

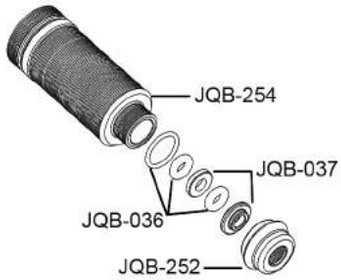

X2 Front

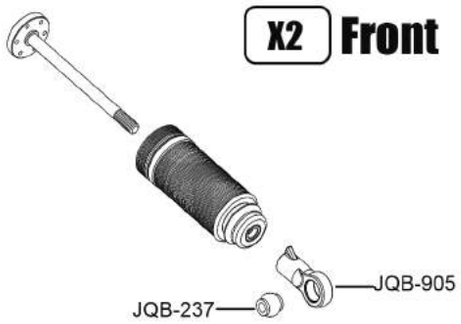

X2 Rear

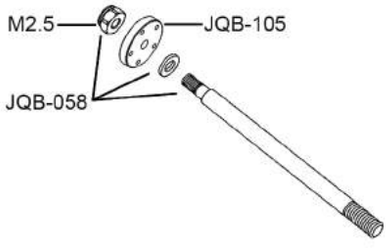

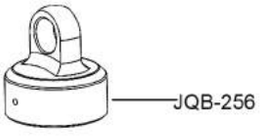

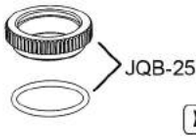

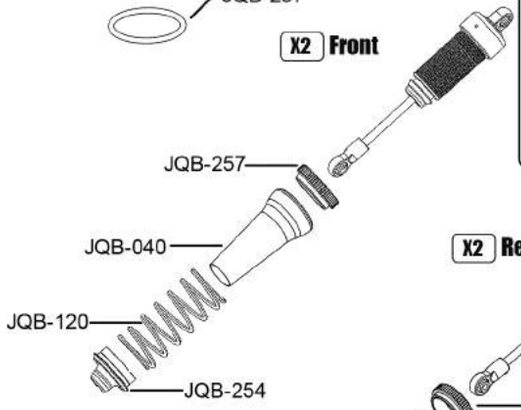

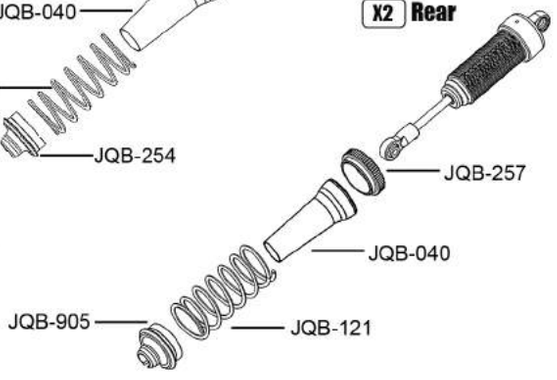

THE ADVICE

Oil:
450 front
500 rear

if weather is cold, try thinner oil, if it is very hot, try thicker oil.

N M2.5(4)

S 2.6x6x0.5(4)

S 7x3.5x1.5(4)

O 7x3x2(8)

O 10x1(4)

THE BAG A

Filling the shock:
- First pull down the piston.
- Fill the shock to the brim.
- Then slowly move the piston up and down to remove excess air.
- Wait until you can't see airbubbles in the oil.
- Tighten the shock cap 1 turn, then push the shaft in leaving 10mm of the shaft exposed.
- Tighten the cap all the way, excess oil and air will exit through the hole in the cap.

JQB-036	Shock O-Rings	JQB-121	Rear Springs Medium, 8.5
JQB-037	Shock Bushings	JQB-237	7mm Ball For Shocks
JQB-040	Shock Boots	JQB-250	THE Soft Shock Bladder
JQB-057	Front Shock Shafts	JQB-253	THE Silk Shock Bodies Rear
JQB-058	Rear Shock Shafts	JQB-254	Complete Front Silk Shocks (2pcs)
JQB-104	5-Hole 1.3mm Piston	JQB-257	Rideheight Adjustment Nut for Silk Shocks and O-ring 2pcs (Gold)
JQB-105	5 Hole 1.4mm Piston	JQB-905	Shock Plastic Parts
JQB-120	Front Springs Medium, 7.5		

"DO NOT CONTACT MANUFACTURER...

THE FRONT DIFF

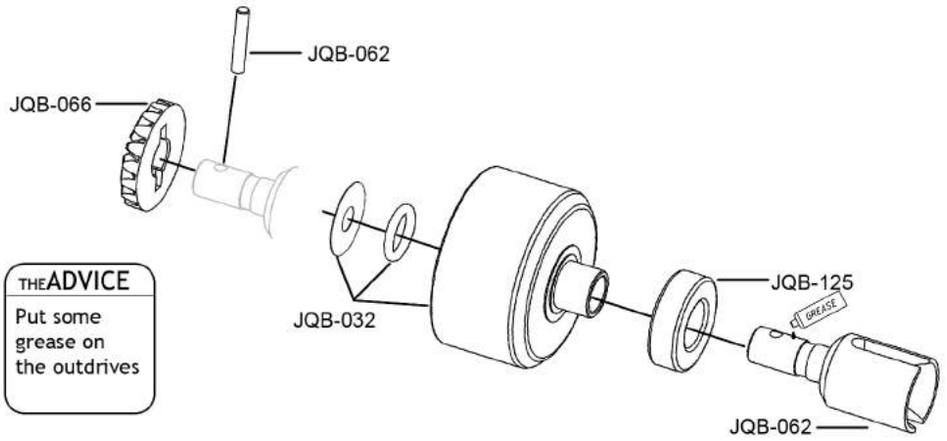

THE ADVICE
Put some grease on the outdrives

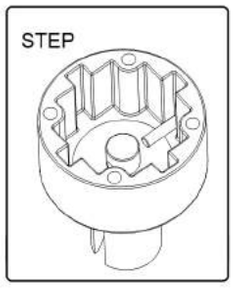

THE ADVICE
Fill about 2mm over cross pins with 5000wt silicon diff oil

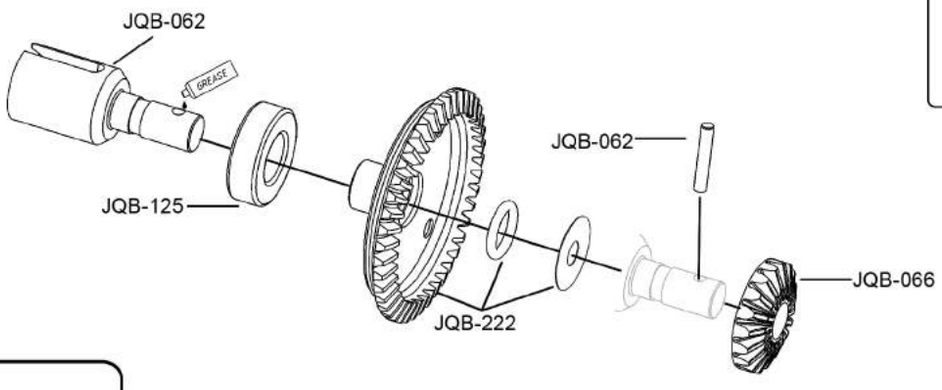

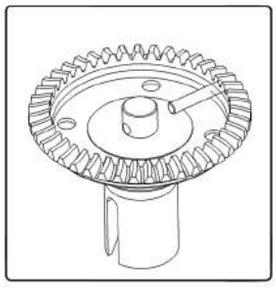

P 2.5x11.8(2)

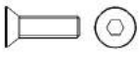
SFH M3x10(4)

O 8.5x1.5(2)

S 6x11.5x0.2(2)

S 3.6x12x0.2(4)

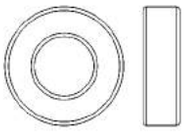
BB 8x16x5(2)

THE BAG

B

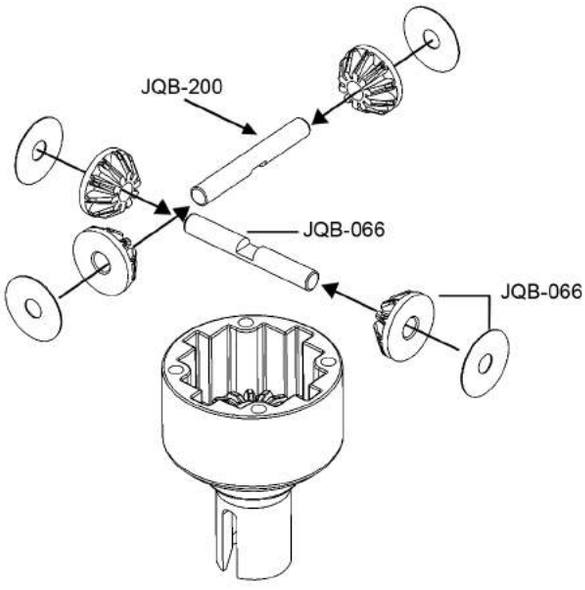

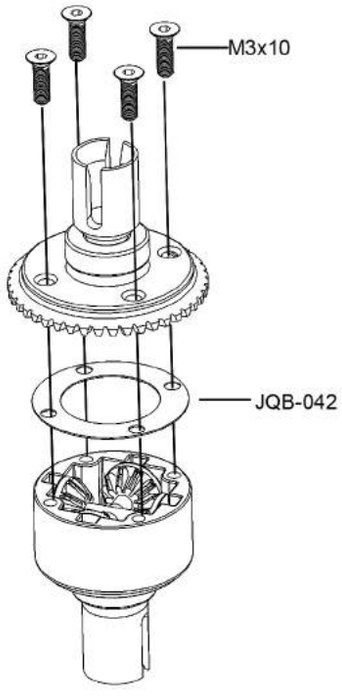

JQB-032	Diff Cup
JQB-042	Diff Gasket
JQB-062	F/R Diff Outdrive Pair
JQB-066	Diff Gear and Crosspin Set
JQB-125	Bearing 8x16x5 4pcs. For Wheels and Differentials
JQB-200	Differential Crosspins (2pcs)
JQB-222	43/13 Front Crowngear

THE CENTRE DIFF

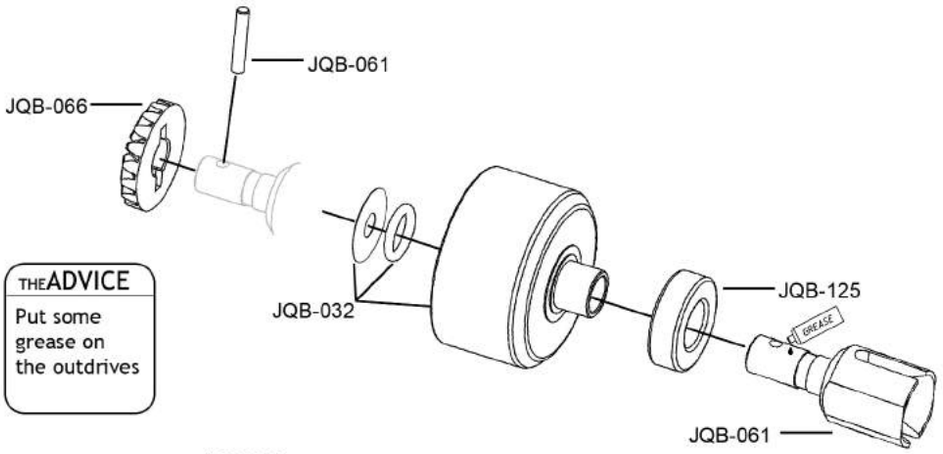

THE ADVICE
Put some grease on the outdrives

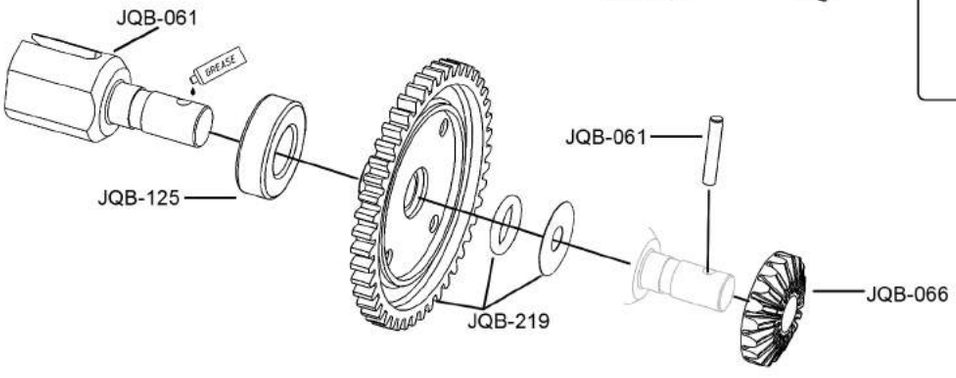

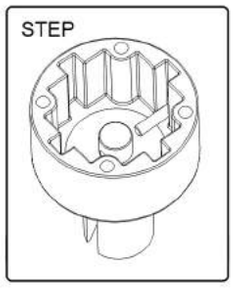

THE ADVICE
Fill about 2mm over cross pins with 7000wt silicon diff oil

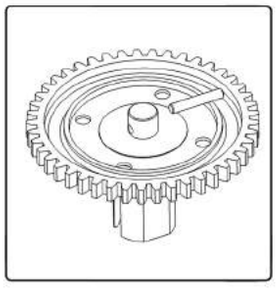

P 2.5x11.8(2)

SBH M3x10(4)

O 8.5x1.5(2)

S 6x11.5x0.2(2)

S 3.6x12x0.2(4)

BB 8x16x5(2)

THE BAG

B

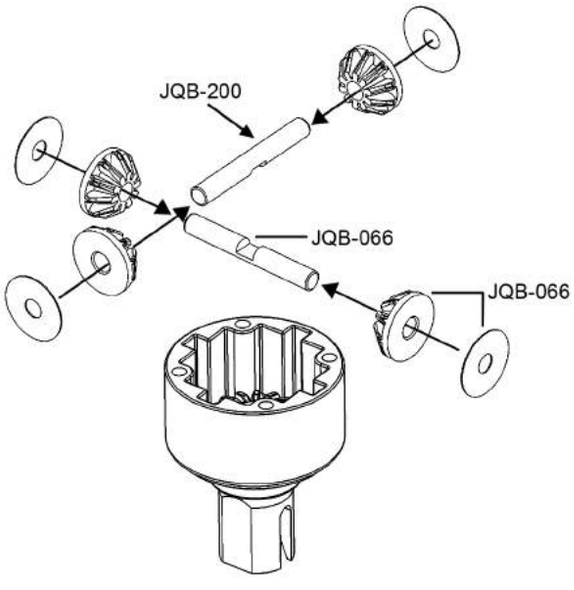

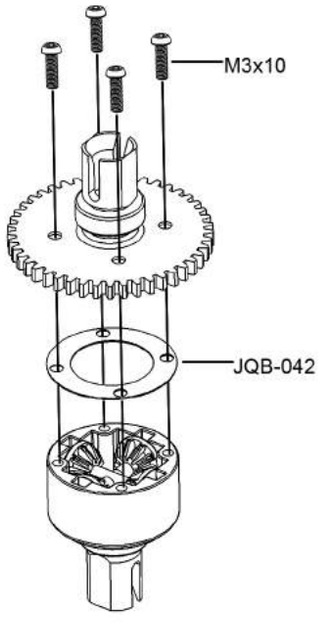

JQB-032	Diff Cup
JQB-042	Diff Gasket
JQB-061	Centre Diff Outdrive Pair
JQB-066	Diff Gear and Crosspin Set
JQB-125	Bearing 8x16x5 4pcs. For Wheels and Differentials
JQB-200	Differential Crosspins (2pcs)
JQB-219	45t Maingear

THE REAR DIFF

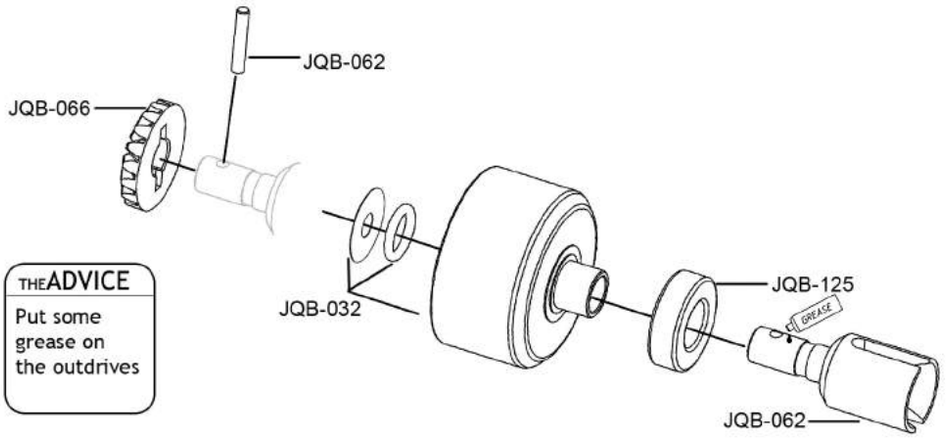

THE ADVICE
Put some grease on the outdrives

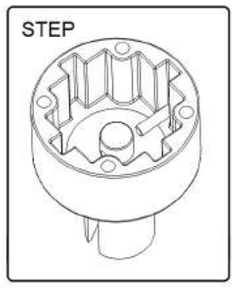

THE ADVICE
Fill about 2mm over cross pins with 3000wt silicon diff oil

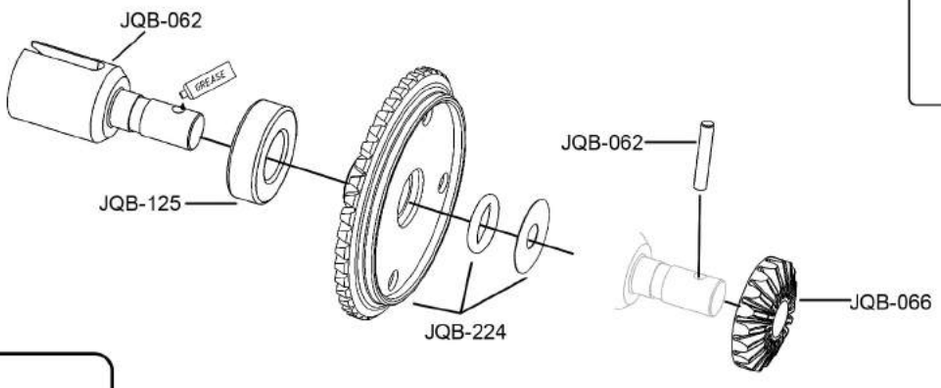

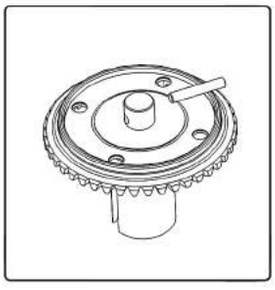

P 2.5x11.8(2)

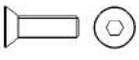

SFH M3x10(4)

O 8.5x1.5(2)

S 6x11.5x0.2(2)

S 3.6x12x0.2(4)

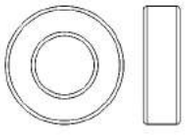

BB 8x16x5(2)

THE BAG

B

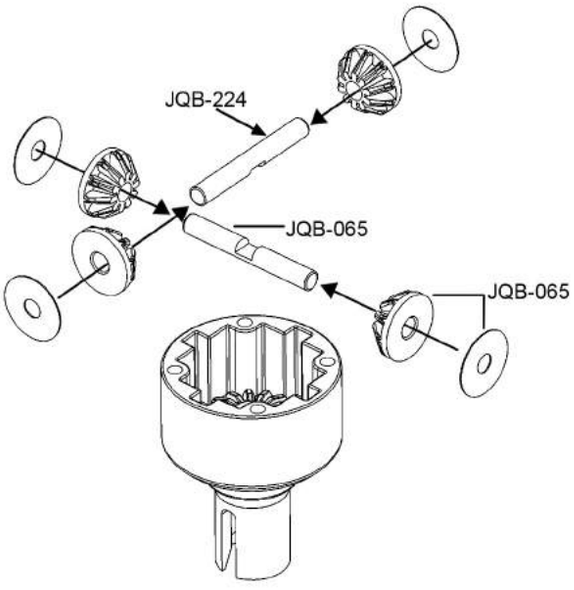

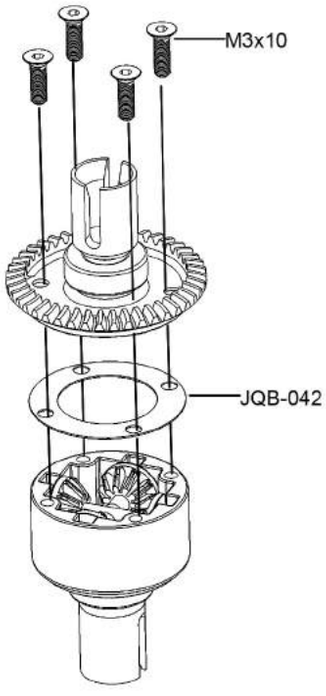

JQB-032	Diff Cup
JQB-042	Diff Gasket
JQB-062	F/R Diff Outdrive Pair
JQB-066	Diff Gear and Crosspin Set
JQB-125	Bearing 8x16x5 4pcs. For Wheels and Differentials
JQB-200	Differential Crosspins (2pcs)
JQB-224	43/13 Rear Crowngear

THE FRONT GEARBOX

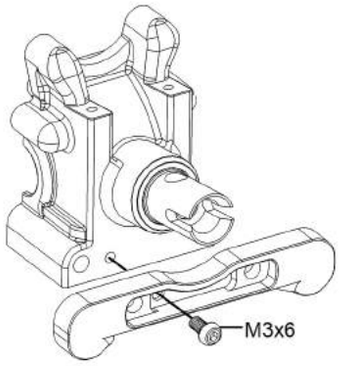

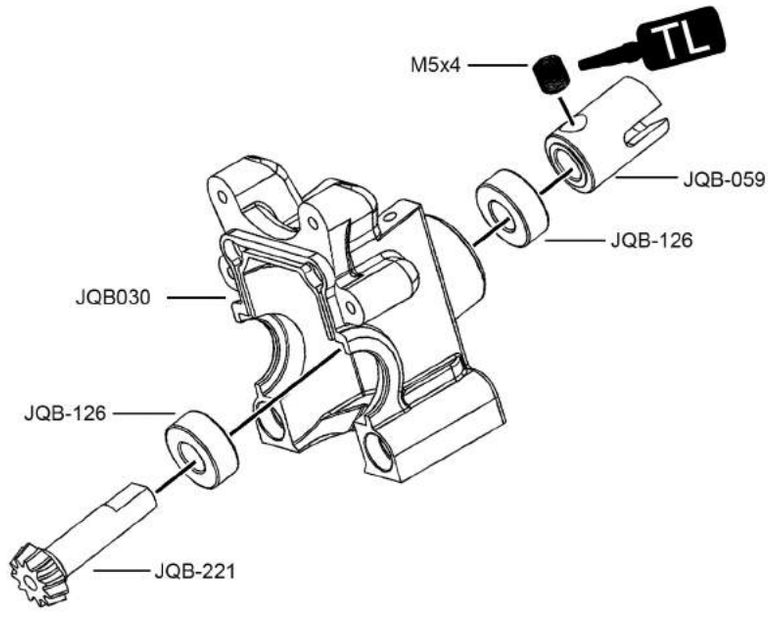

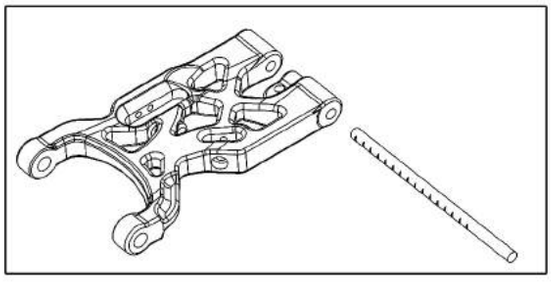

THE ADVICE

Make sure the hingepin moves freely. Use an arm reamer if necessary.

THE ADVICE

Use a small amount of glue to secure the nut (M4)

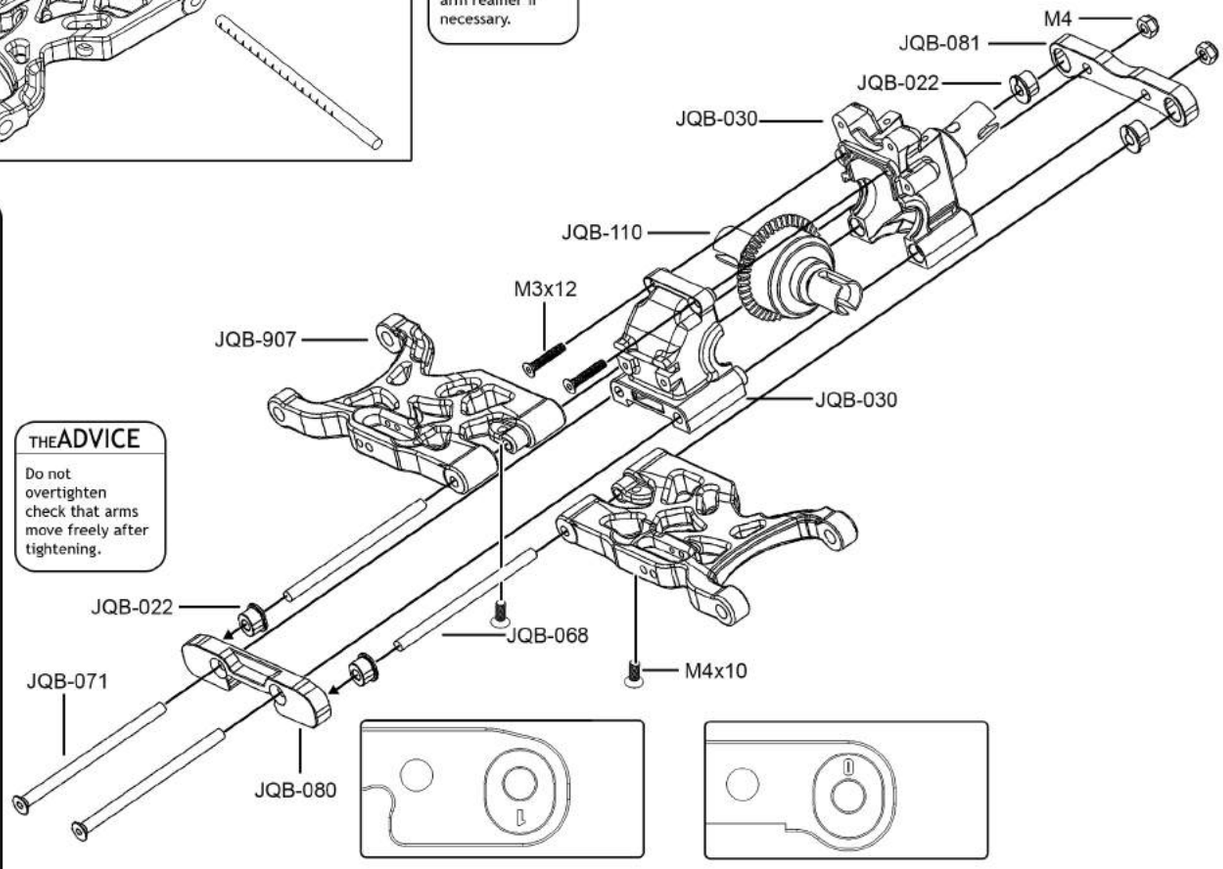

THE ADVICE

Do not overtighten check that arms move freely after tightening.

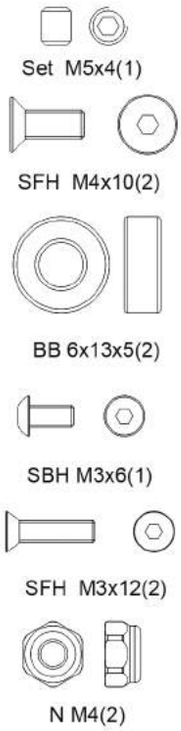

THE BAG C

JQB-022	Arm Holder Inserts	JQB-221	13t Pinion
JQB-030	Front Gearbox	JQB-126	Bearing 6x13x5 2pcs. For diff pinion
JQB-059	Centre Outdrive Pair	JQB-907	Front Arms
JQB-068	Inner Hingepins. 61.5mm Front 64.5mm Rear		
JQB-071	Gearbox Screws		
JQB-080	Front-F Arm Holder		
JQB-081	Front-R Arm Holder		

THE FRONT GEARBOX

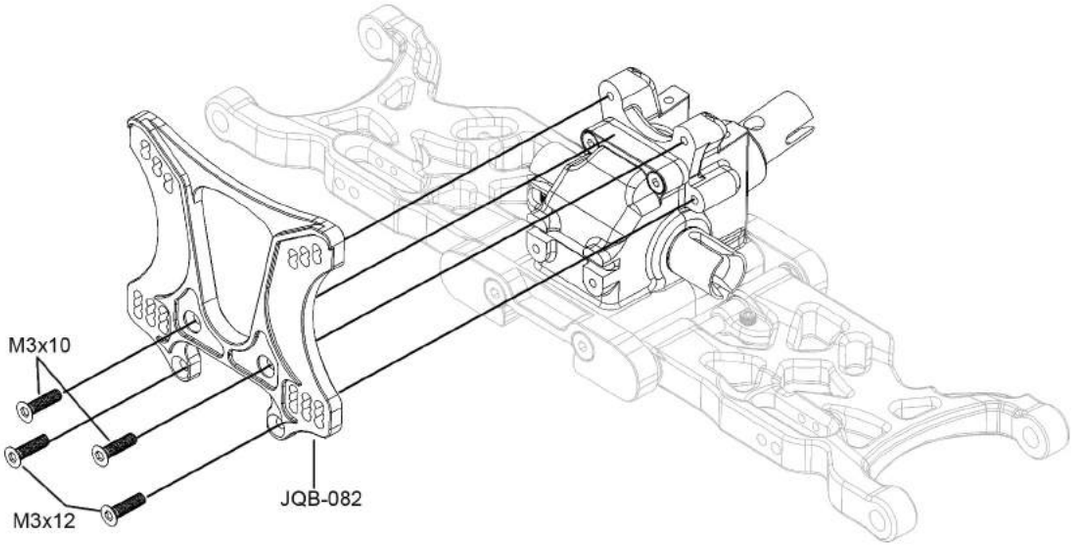

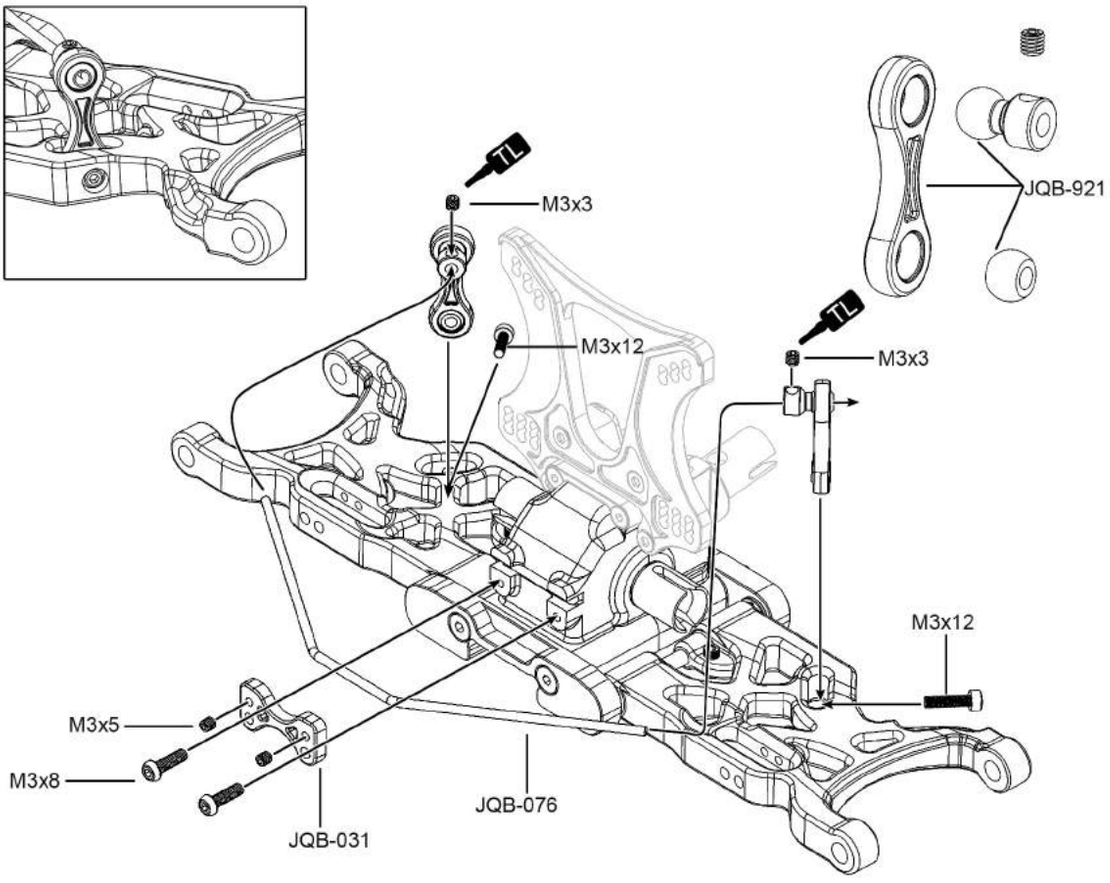

Set M3x3(2)

Set M3x5(2)

SFH M3x10(2)

SFH M3x12(2)

SBH M3x8(2)

BH M3x12(2)

THE BAG D

JQB-031	Swaybar Holders
JQB-076	2.3mm Front Swaybar
JQB-082	Front Shock Tower
JQB-921	Swaybar Links

THE FRONT LINKS

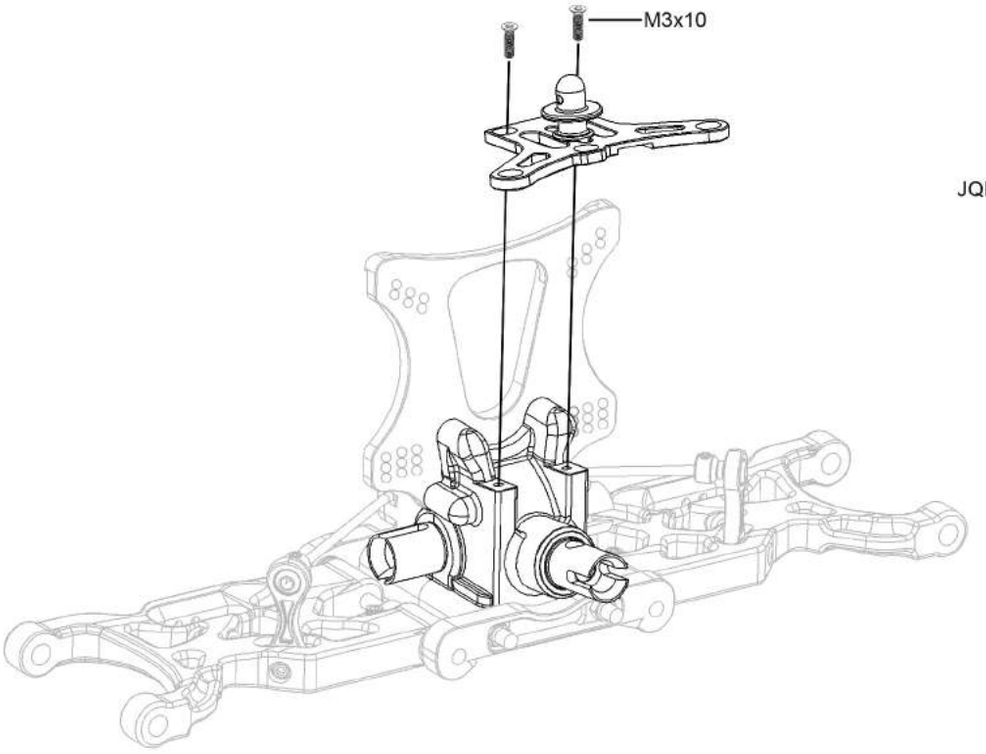

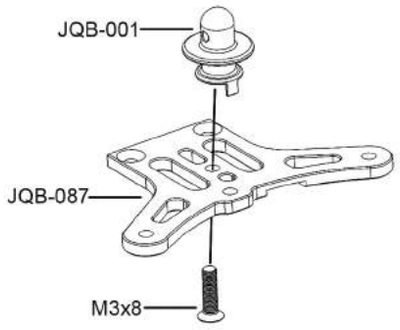

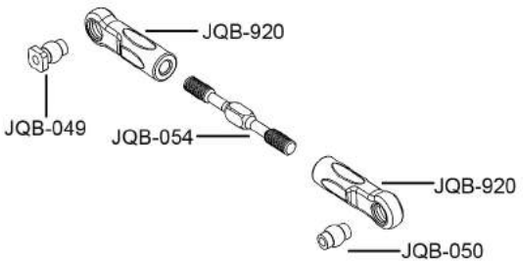

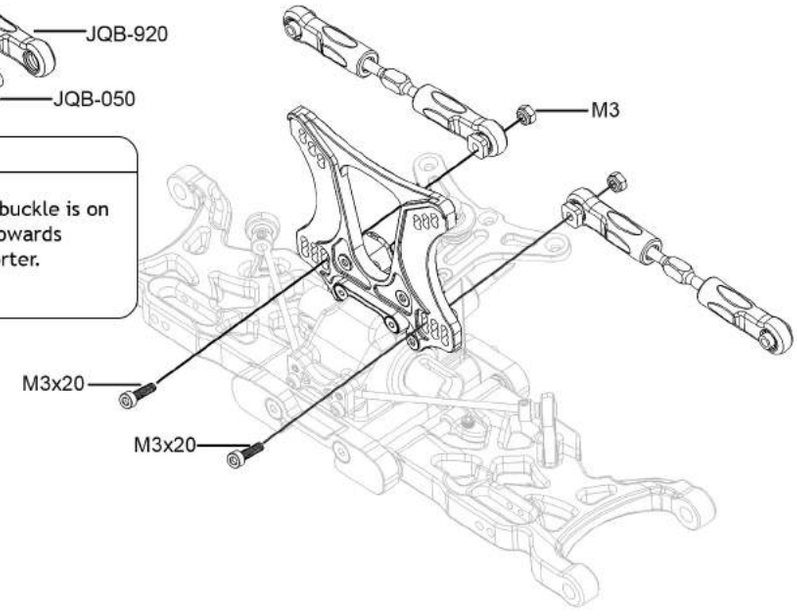

THE ADVICE

Fit the link, so the line on the turnbuckle is on the right. When you turn the link towards the back of the car, it becomes shorter.

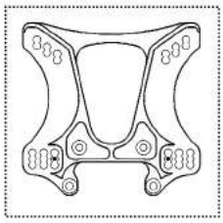

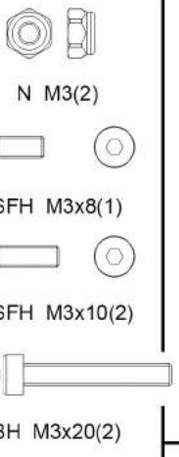

THE BAG D

JQB-001	Bodymounts
JQB-050	7mm Ball for Upper Link
JQB-054	Turnbuckles, Upper Link
JQB-087	Servo Saver Top Plate
JQB-920	Upper Links

"WHEN IN DOUBT...

THE C-HUBS

THE ADVICE

The bushing JQB-070 stops the bearings from being crushed when the setscrew is tightned. If the bearings dont turn freely, after tightening, add one shim at a time, until they do. Normally 0-1shims

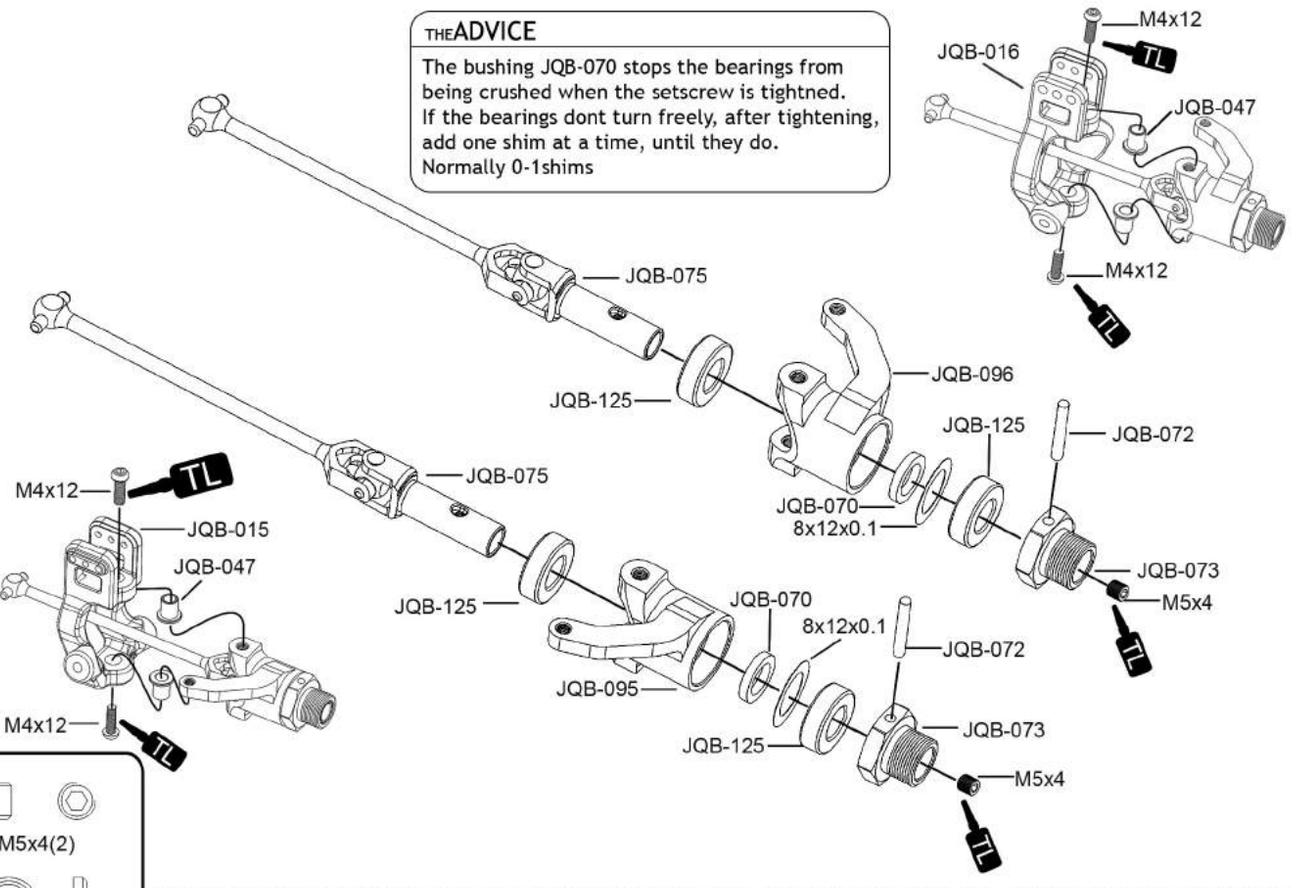

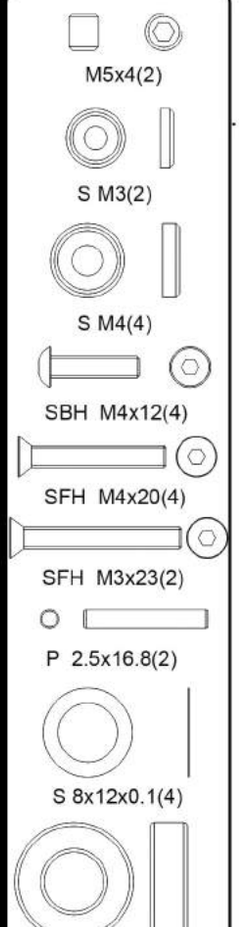

THE BAG

E

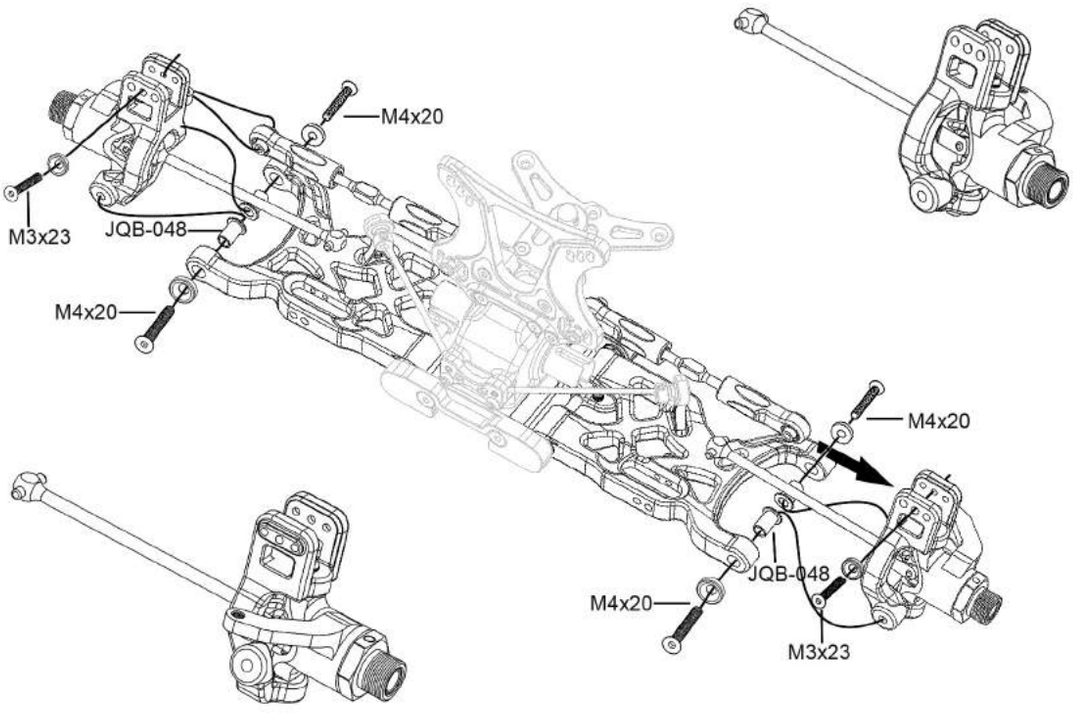

JQB-015	16 Degree C-hub R	JQB-075	Front Driveshaft Pair
JQB-016	16 Degree C-hub L	JQB-095	Right CNC Steering Knuckle
JQB-047	Steering Knuckle Bushing	JQB-096	Left CNC Steering Knuckle
JQB-048	Arm Bushing	JQB-125	Bearing 8x16x5 4pcs. For Wheels and Differentials
JQB-070	Wheel Bearing Spacers		
JQB-072	Hex Pin and Grubscrew		
JQB-073	4.3mm Hex with Nut		

THE REAR GEARBOX

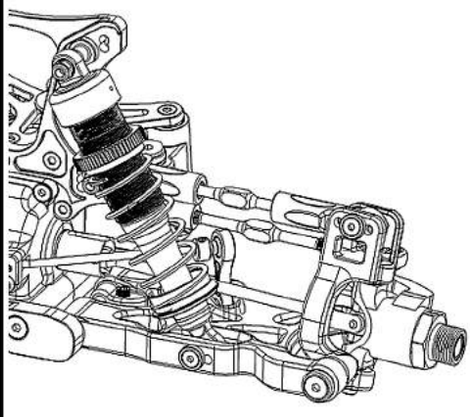

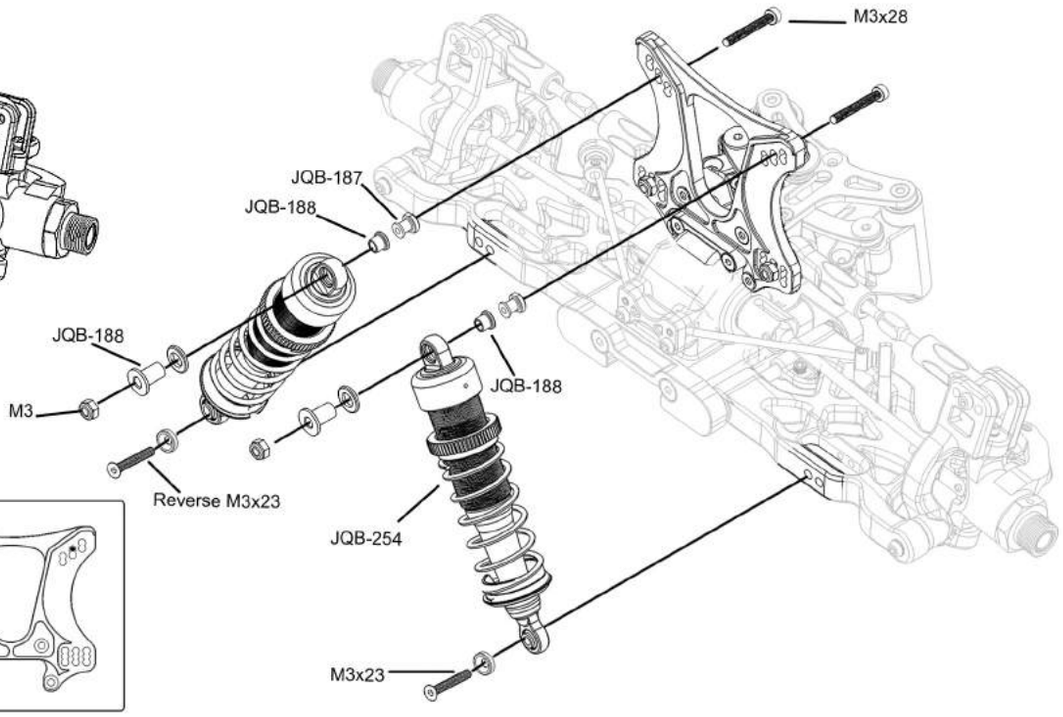

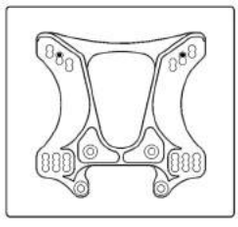

S M3(2)

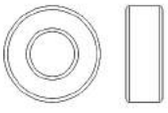

BB 6x13x5(2)

Set M5x4(1)

N M3(2)

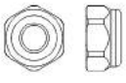

N M4(2)

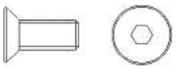

SFH M4x10(2)

SFH M3x23(3)

Reverse SFH M3x23(1)

BH M3x28(2)

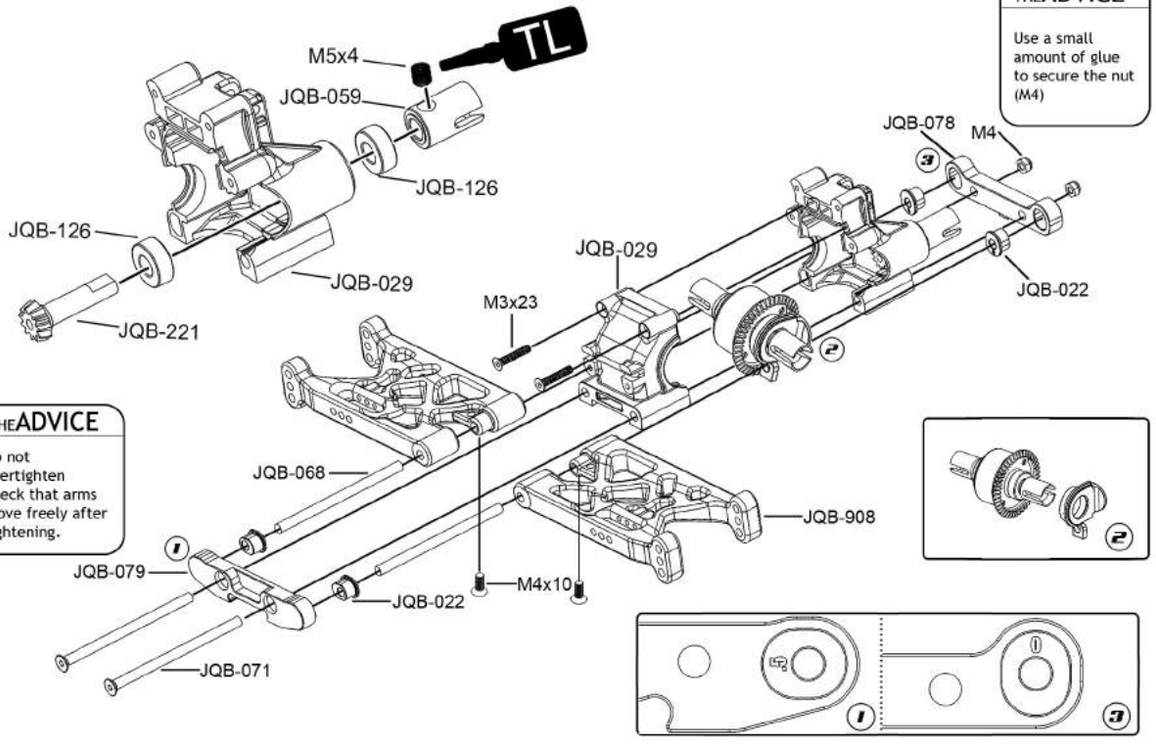

THE BAG

F

JQB-022	Arm Holder Inserts	JQB-187	Steel Shock Holder for One-Piece CNC Shock Cap, (4pcs)
JQB-029	Rear Gearbox	JQB-188	Mounting Hardware set
JQB-059	Centre Outdrive Pair	JQB-221	13t Pinion
JQB-068	Inner Hingepins. 61.5mm Front 64.5mm Rear	JQB-126	Bearing 6x13x5 2pcs. For diff pinion
JQB-071	Gearbox Screws	JQB-254	Complete Front Silk Shocks (2pcs)
JQB-078	Rear Arm Holder. 1-3 Antisquat	JQB-908	Rear Arms
JQB-079	Rear Arm Holder 1-3 Toe-In		

THE WINGMOUNT

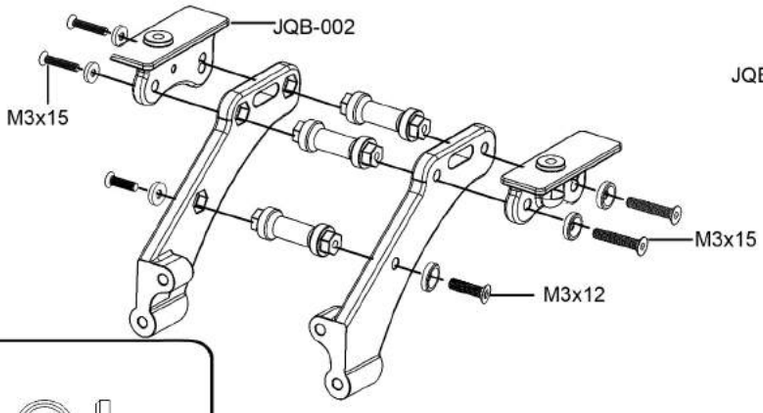

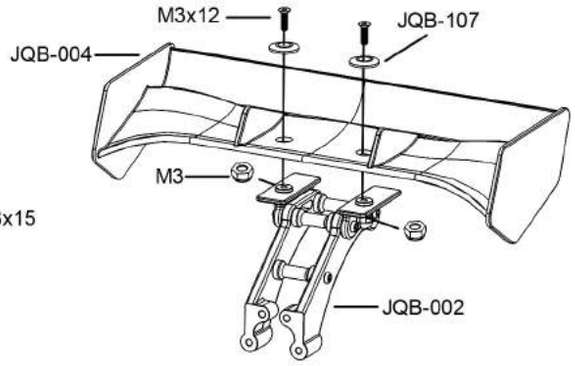

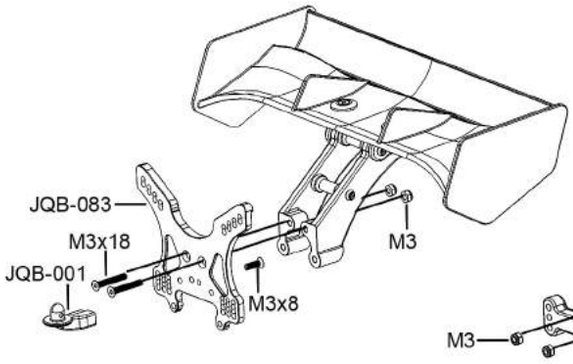

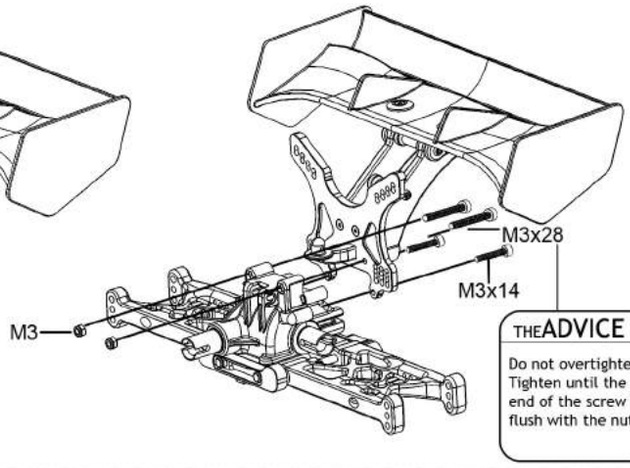

THE ADVICE

Do not overtighten. Tighten until the end of the screw is flush with the nut.

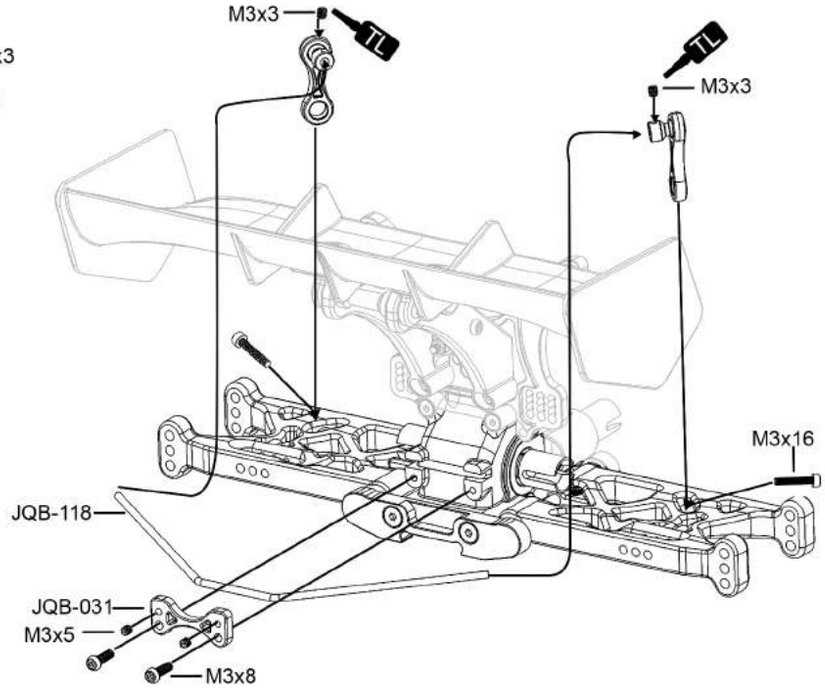

S M3(6)

Set M3x3(2)

Set M3x5(2)

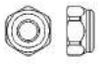

N M3(6)

SFH 3x8(1)

SBH 3x8(2)

SFH 3x12(4)

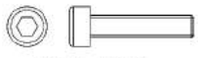

BH 3x14(2)

SFH 3x15(4)

SFH 3x18(2)

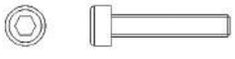

BH M3x16(2)

BH 3x28(2)

THE BAG

G

JQB-001	Bodymounts
JQB-002	Wingmount
JQB-004	Wing (Black)
JQB-031	Swaybar Holders
JQB-083	Rear Shock Tower
JQB-107	Wing Shims
JQB-118	2.4 Rear Swaybar
JQB-921	Swaybar Links

THE REAR HUBS

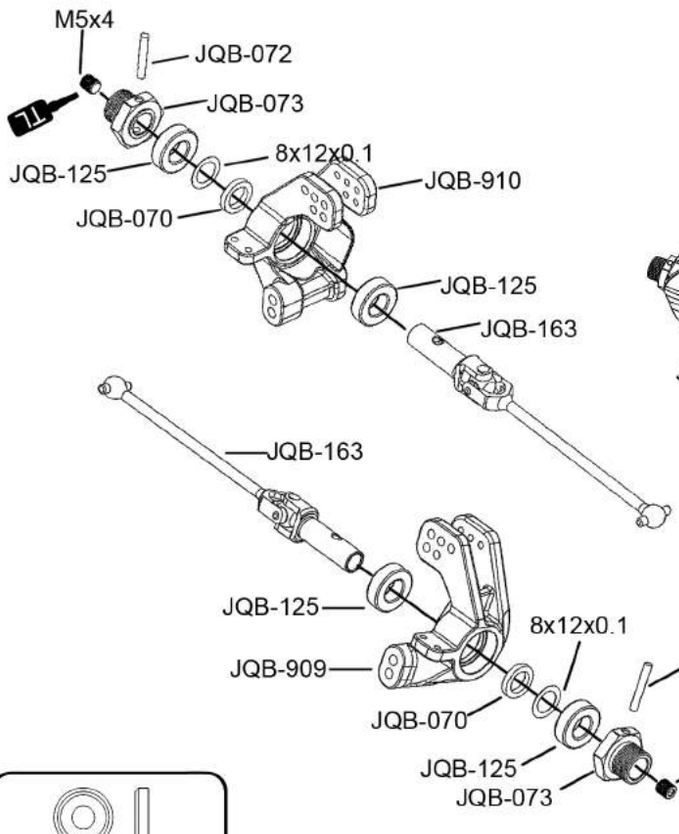

THE ADVICE

The bushing JQB-070 stops the bearings from being crushed when the setscrew is tightned. If the bearings dont turn freely, after tightening, add one shim at a time, until they do. Normally 0-2shims

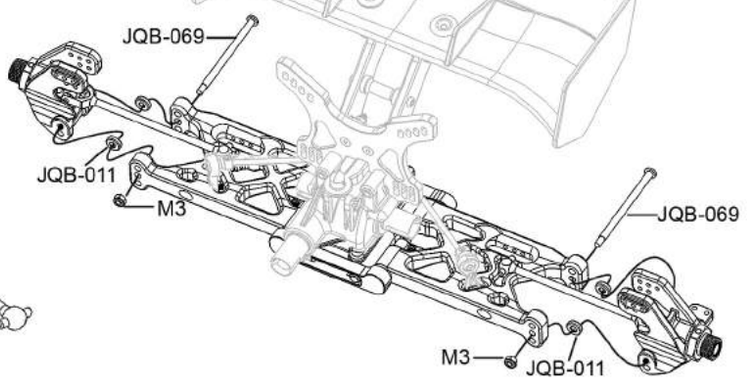

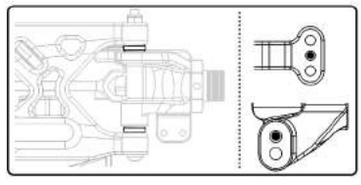

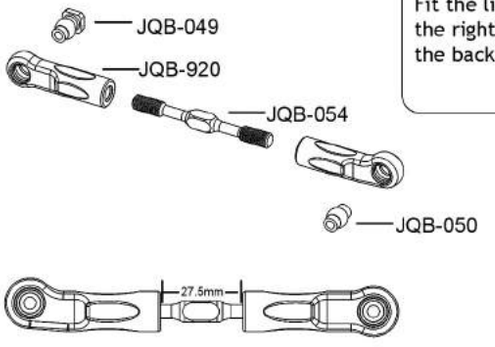

THE ADVICE

Fit the link, so the line on the turnbuckle is on the right. When you turn the link towards the back of the car, it becomes shorter.

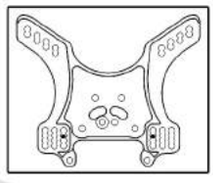

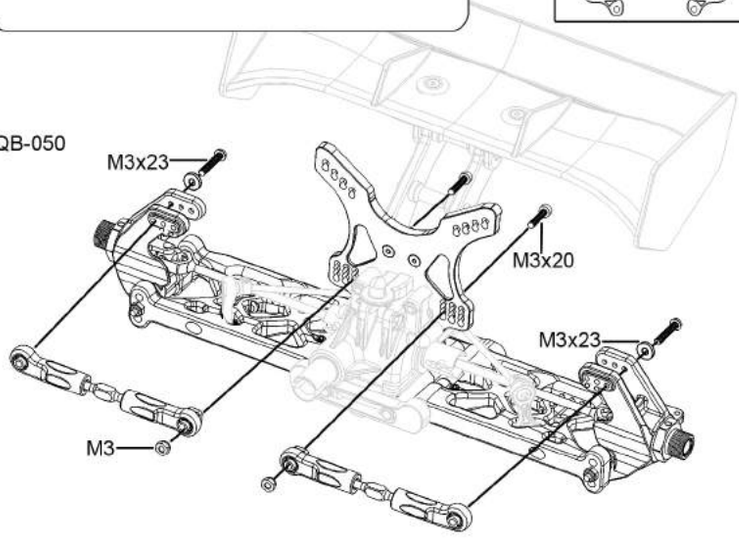

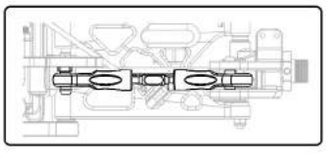

S M3(2)

Set M5x4(2)

N M3(4)

P 2.6x16.8(2)

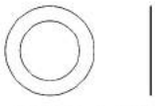
S 8x12x0.1(4)

BB 8x16x5(4)

SFH M3x23(2)

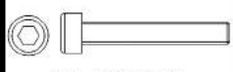
BH M3x20(2)

THE BAG

H

JQB-011	Rear Hub Spacers	JQB-125	Bearing 8x16x5 4pcs. For Wheels and Differentials
JQB-049	7mm Ball with Nut	JQB-163	Rear Driveshaft Pair
JQB-050	7mm Ball for Upper Link	JQB-909	Rear Hub Right
JQB-054	Turnbuckles, Upper Link	JQB-910	Rear Hub Left
JQB-069	Rear Hingepin Screws	JQB-920	Upper Links
JQB-070	Wheel Bearing Spacers		
JQB-072	Hex Pin and Grubscrew		
JQB-073	4.3mm Hex with Nut		

"YOU ARE HALFWAY THERE"

THE CENTRE DIFF MOUNT

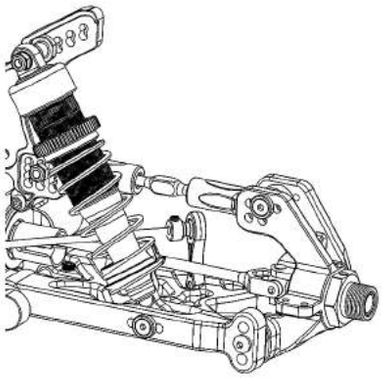

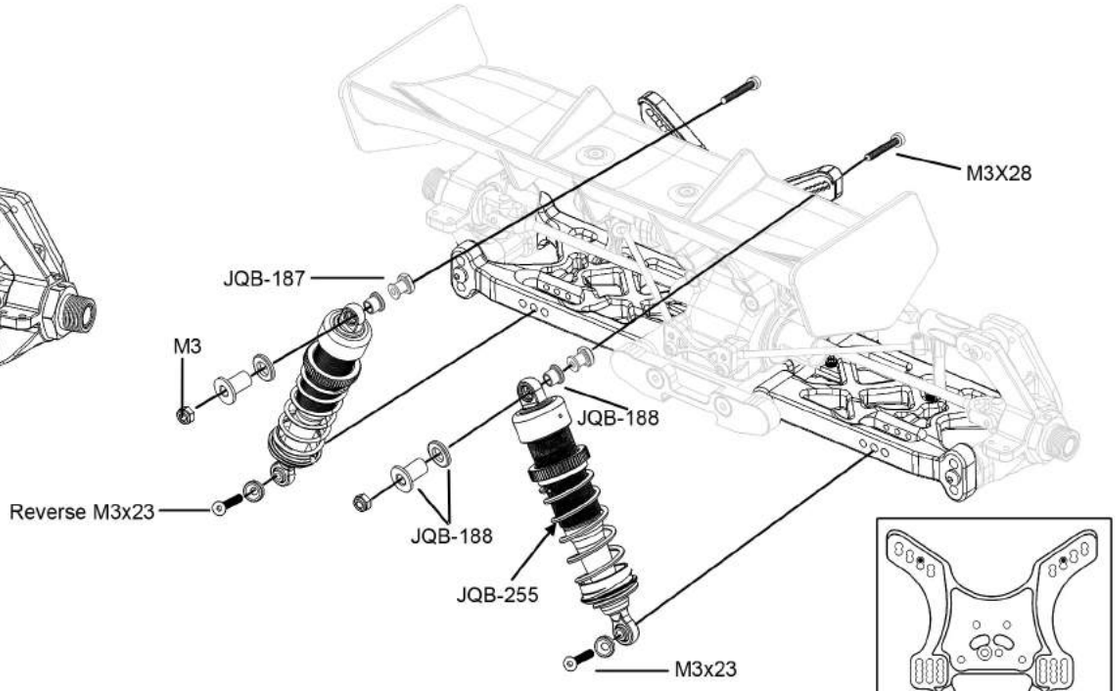

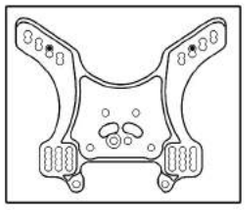

S M3(2)

Set M3x3(2)

Set M3x5(4)

N M3(2)

BB 5x8x2.5(2)

SBH M3x8(6)

SBH M3x15(2)

SFH M3x23(1)

Reverse SFH M3x23(1)

BH M3x28(2)

SBH M3x12(4)

THE BAG

I

ALL TL

ATTENTION! NOTE DIRECTION OF BRAKECAMS

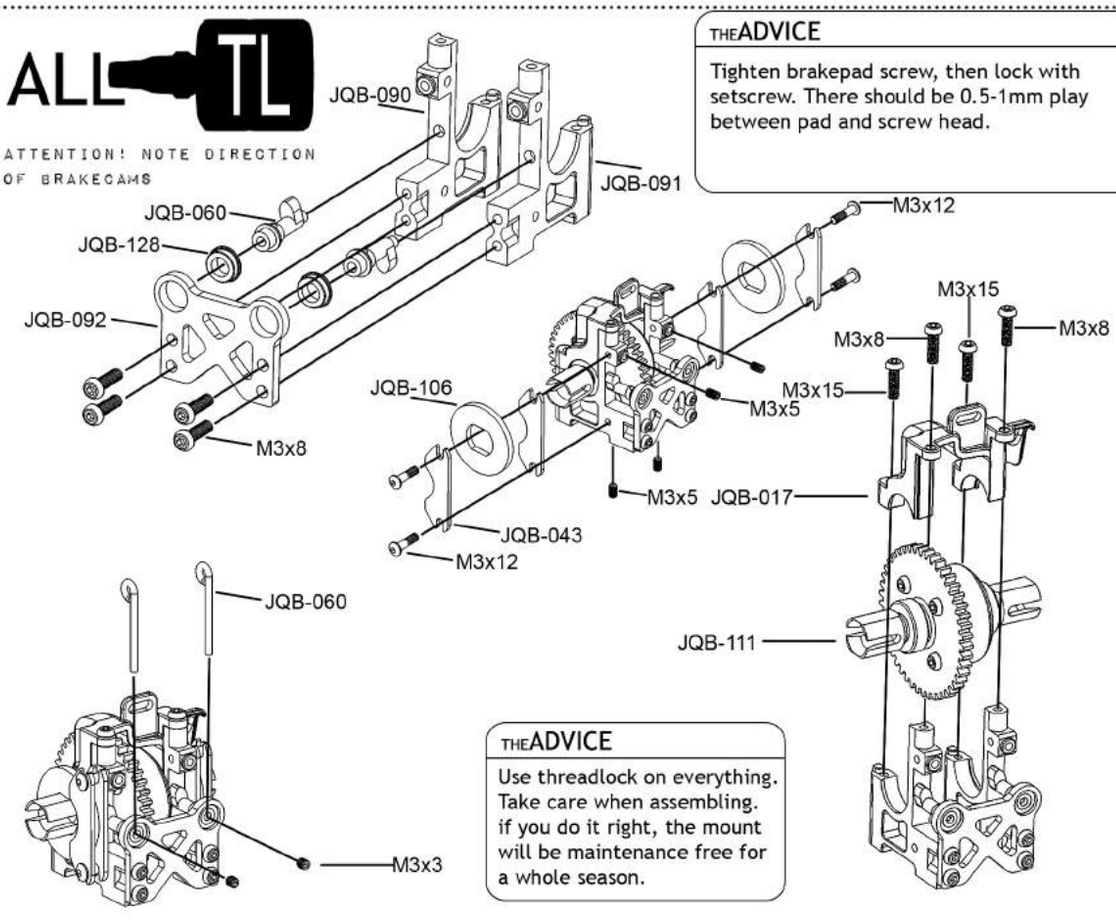

THE ADVICE

Tighten brakepad screw, then lock with setscrew. There should be 0.5-1mm play between pad and screw head.

THE ADVICE

Use threadlock on everything. Take care when assembling. if you do it right, the mount will be maintenance free for a whole season.

JQB-017	Centre Diffmount Top	JQB-106	Glass Fibre Brake Disks
JQB-043	Brake Pad	JQB-128	Bearing 5x8x2.5 Flanged bearing 2pcs for Brakes
JQB-056	Shock Holder	JQB-187	Steel Shock Holder for One-Piece CNC Shock Cap, (4pcs)
JQB-060	Brake Cams and Levers	JQB-188	Mounting Hardware set
JQB-090	Centre Diff Mount Front	JQB-255	Complete Rear Silk Shocks(Silk)
JQB-091	Centre Diff Mount Rear		
JQB-092	Centre Diff Mount Plate		

"REMEMBER TO INSERT THE BRAKEDISKS"

THE STEERING AND CHASSIS

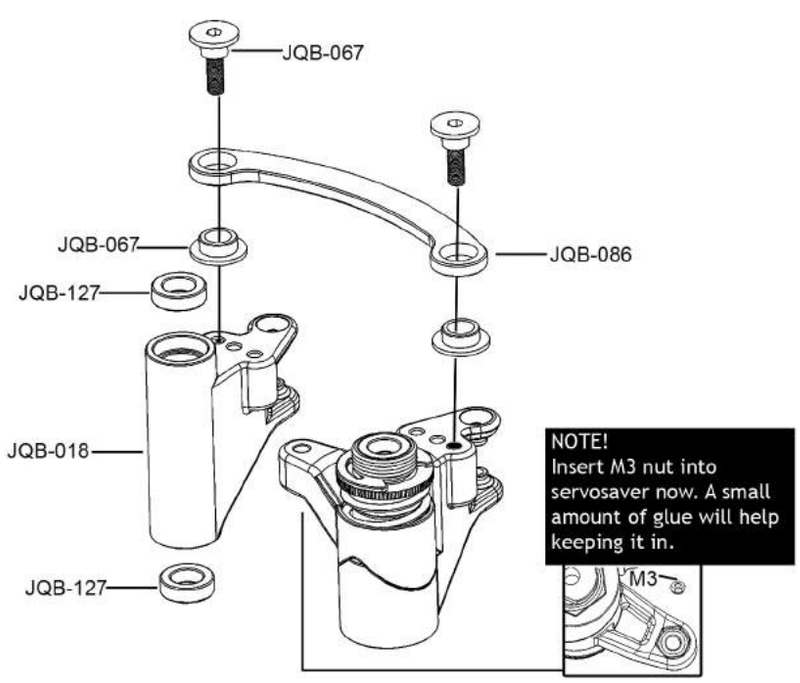

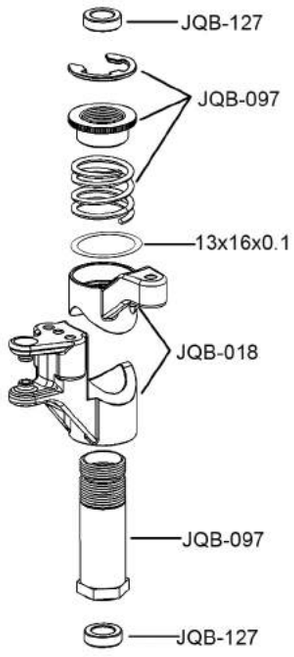

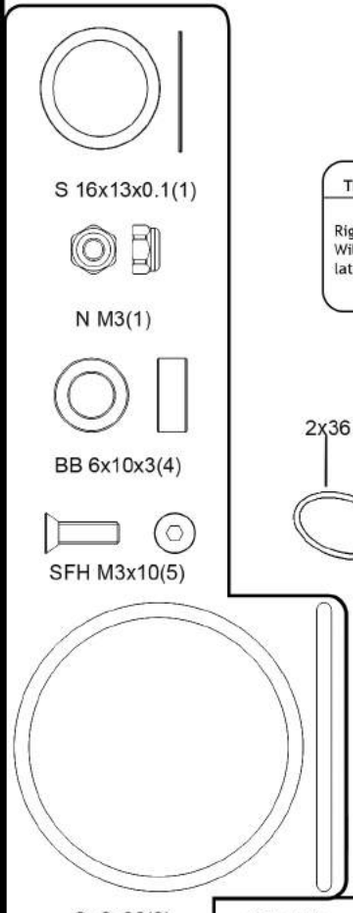

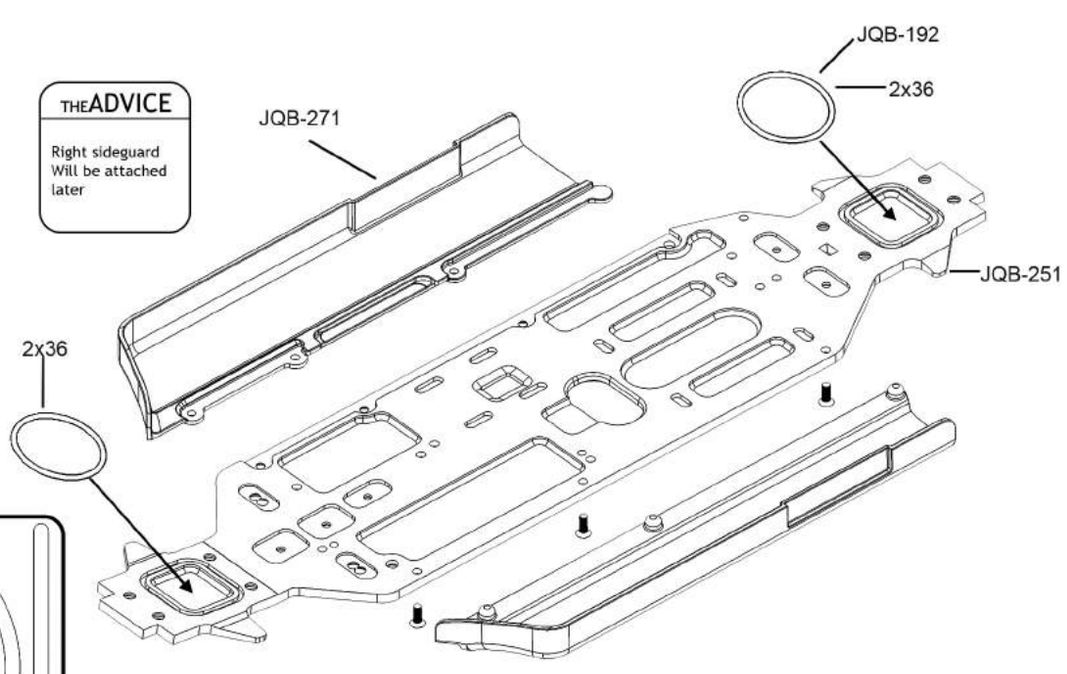

THE BAG J

JQB-018	Plastic Steering Parts	JQB-903	Front Arms
JQB-067	Ackermann Plate Screw and Bushing		
JQB-086	Long Ackermann Plate		
JQB-097	Servo Saver Parts		
JQB-127	Bearing 6x10x3 4pcs for Steering		
JQB-192	Chassis O-Ring		
JQB-251	THE Flex Chassis		
JQB-271	THE Sideguards, for Flex Chassis		

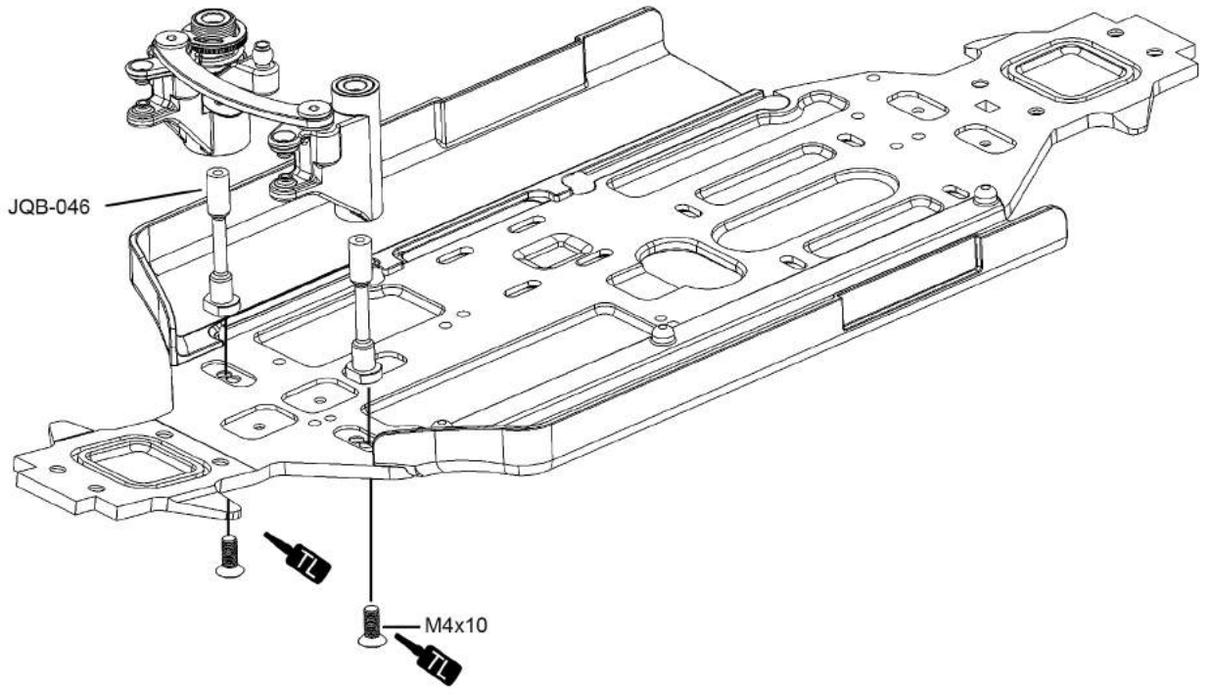

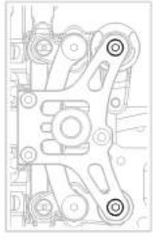

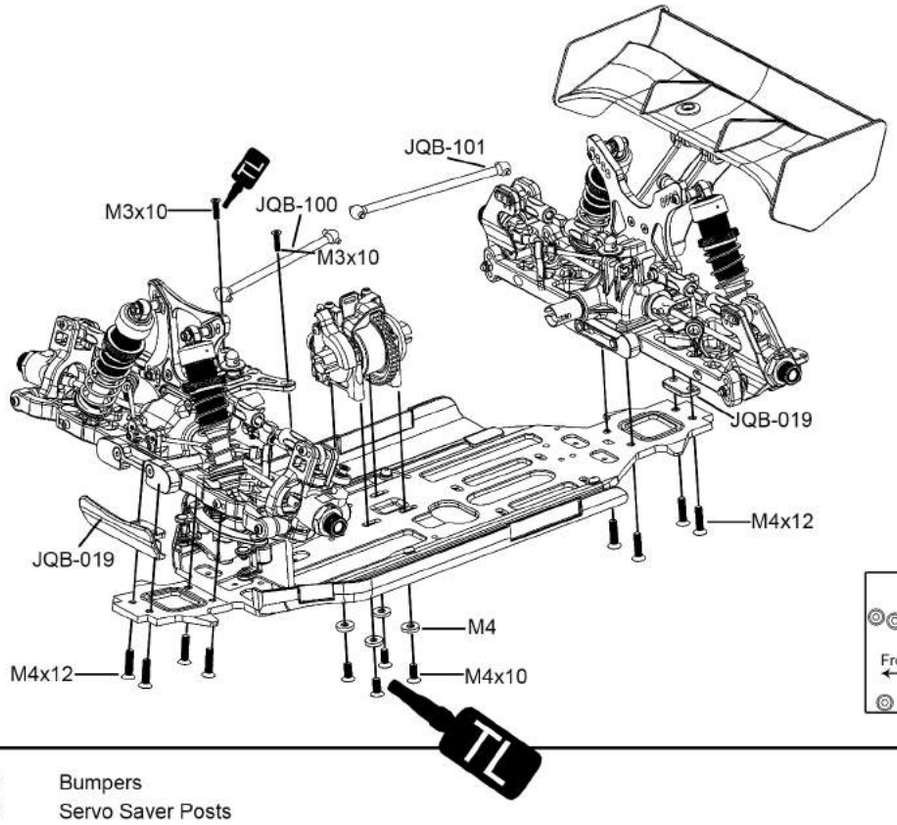

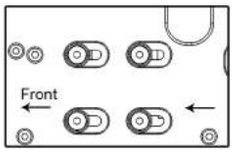

S M4(4)

SFH M3x10(2)

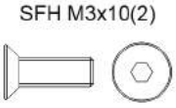
SFH M4x12(8)

SFH M4x10(6)

THE BAG

J

JQB-019	Bumpers
JQB-046	Servo Saver Posts
JQB-100	86mm Centre Dogbone
JQB-101	110mm Centre Dogbone

THE BRACES AND LINKS

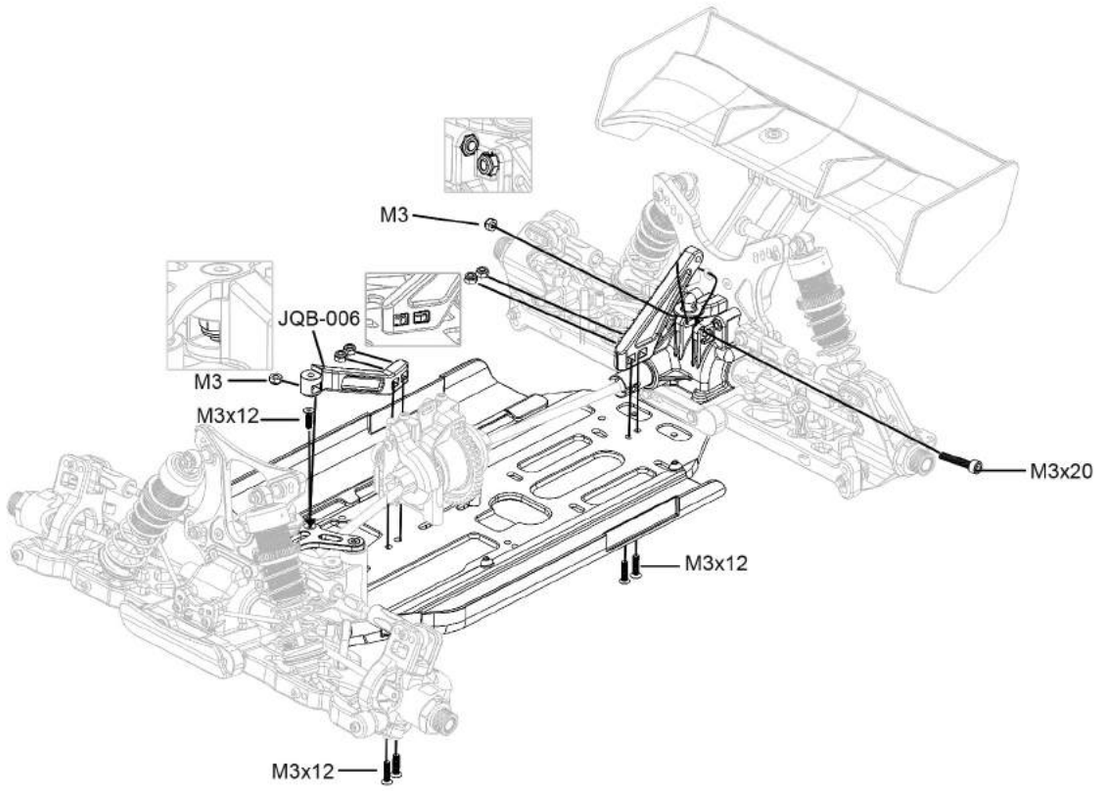

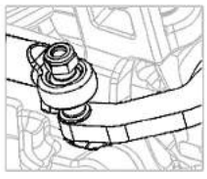

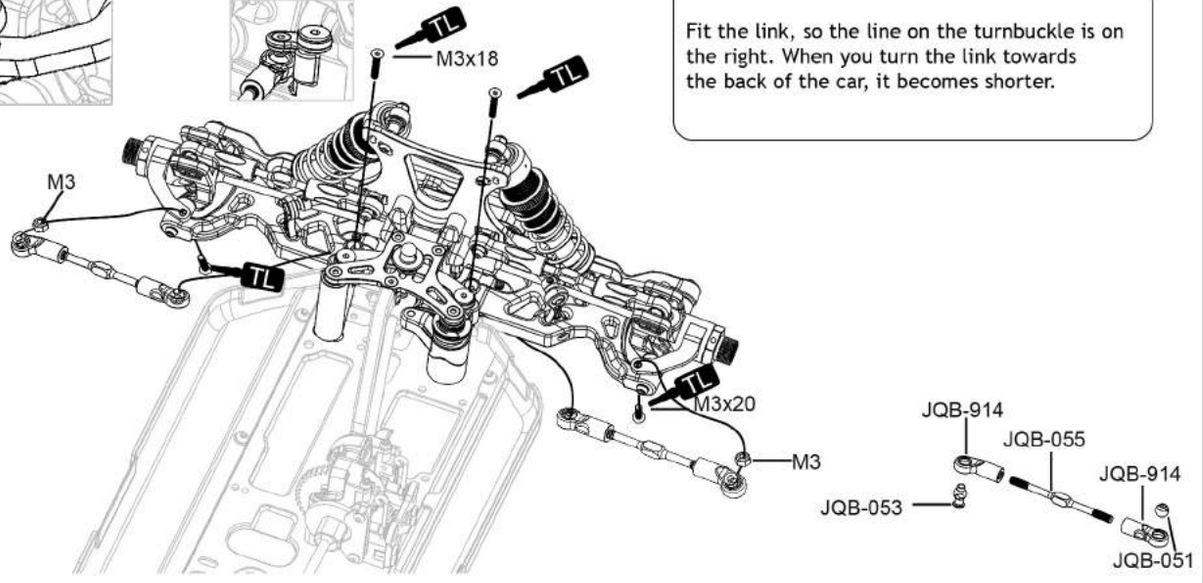

THE ADVICE

Fit the link, so the line on the turnbuckle is on the right. When you turn the link towards the back of the car, it becomes shorter.

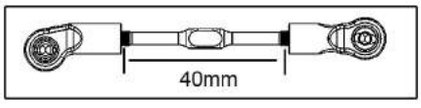

N M3(8)

SFH M3x12(5)

SFH M3x18(2)

SFH M3x20(2)

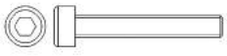

BH 3x20(1)

THE BAG

K

JQB-006	Chassis Braces
JQB-051	7mm Ball For Shock and Steering
JQB-052	7mm Ball For Steering (Outer)
JQB-055	Turnbuckles, Steering
JQB-914	Steering Links

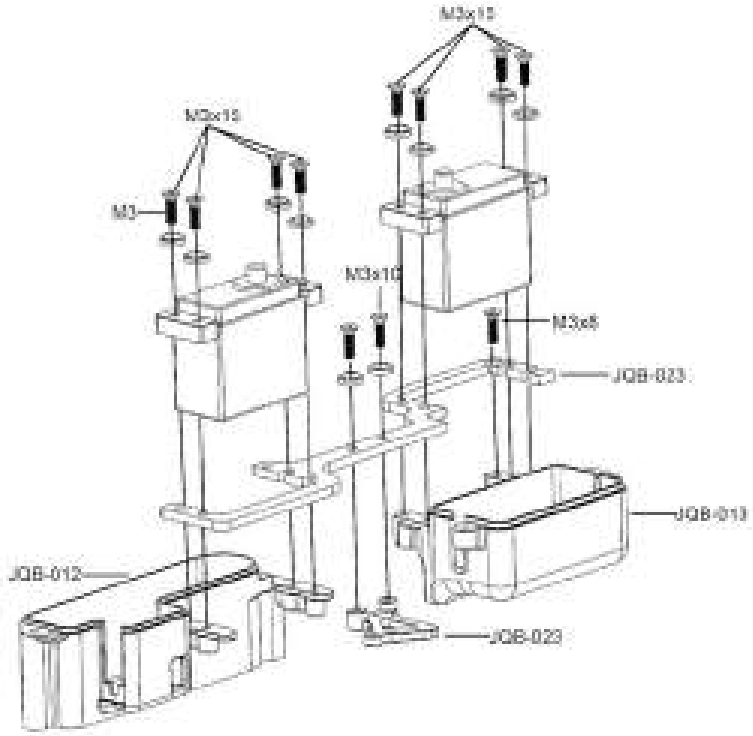

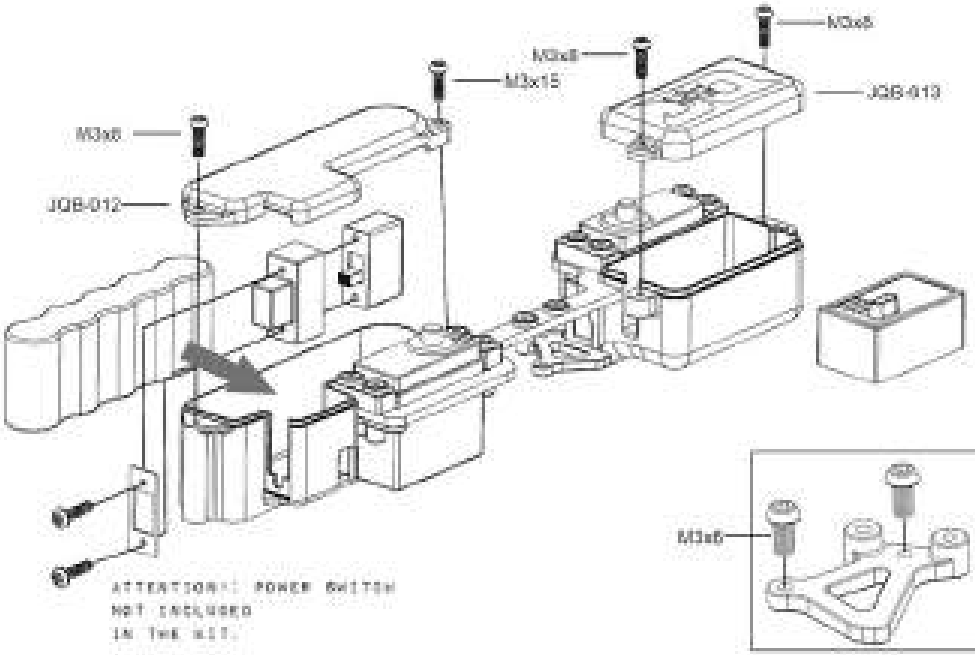

8 M3 (10)

SFH M3x10(2)

SFH M3x8(1)

SBH M3x8(2)

SBH M3x8(3)

SBH M3x15(1)

SFH M3x15(9)

THE BAG

L

JQB-012	Battery Box
JQB-013	Receiver Box
JQB-023	Radiotray with Transponder Mount

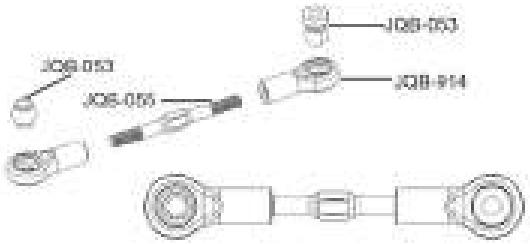

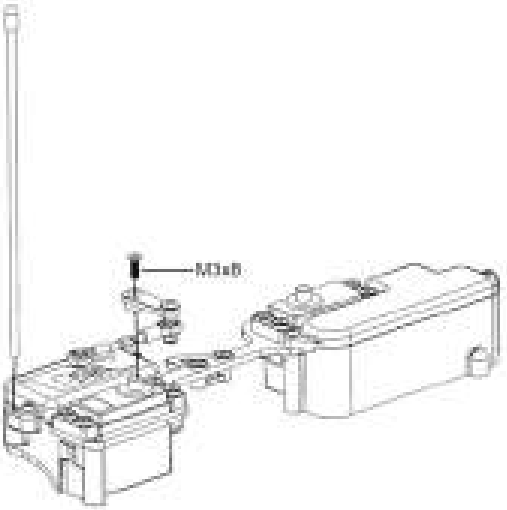

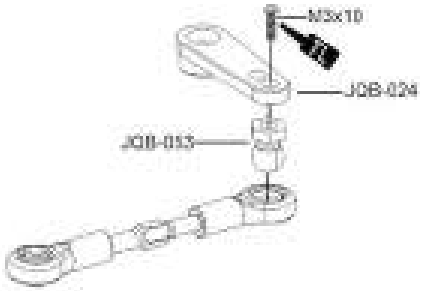

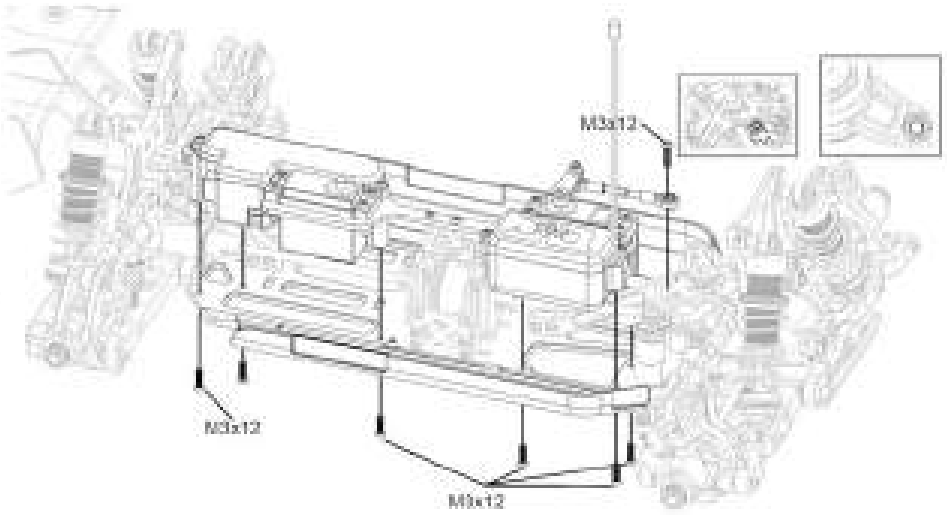

THE BAG

L

JQB-024	Servo Arms
JQB-053	6mm Balls for Steering Link
JQB-055	Turnbuckles, Steering
JQB-914	Steering Links

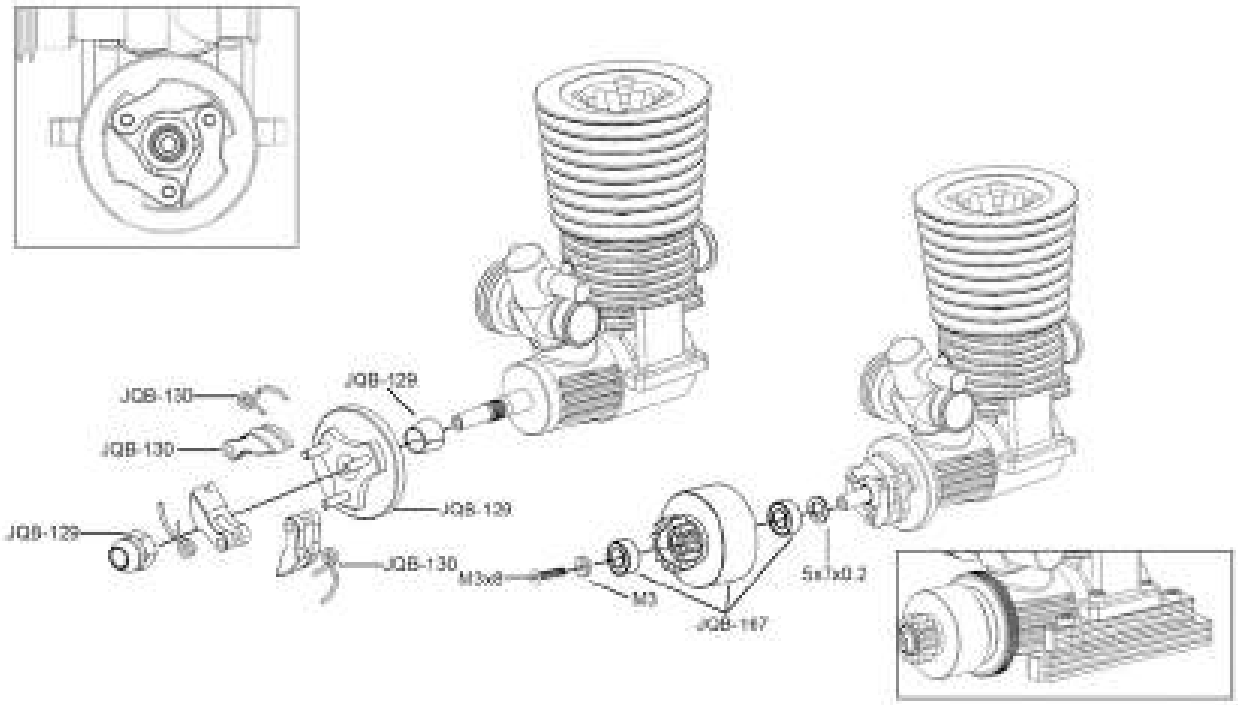

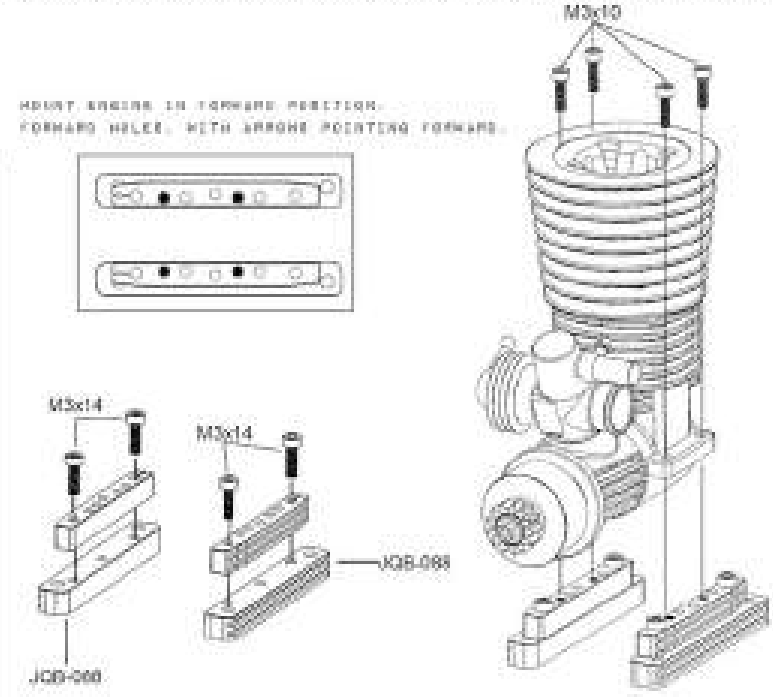

THEBAG

M

JQB-088	Engine Mount Set
JQB-129	Flywheel with nut and collet
JQB-130	7075 Black Clutch Shoes with springs, 3pcs for 3-shoe clutch
JQB-167	19t Clutchbell with 2pcs 5x10 bearing

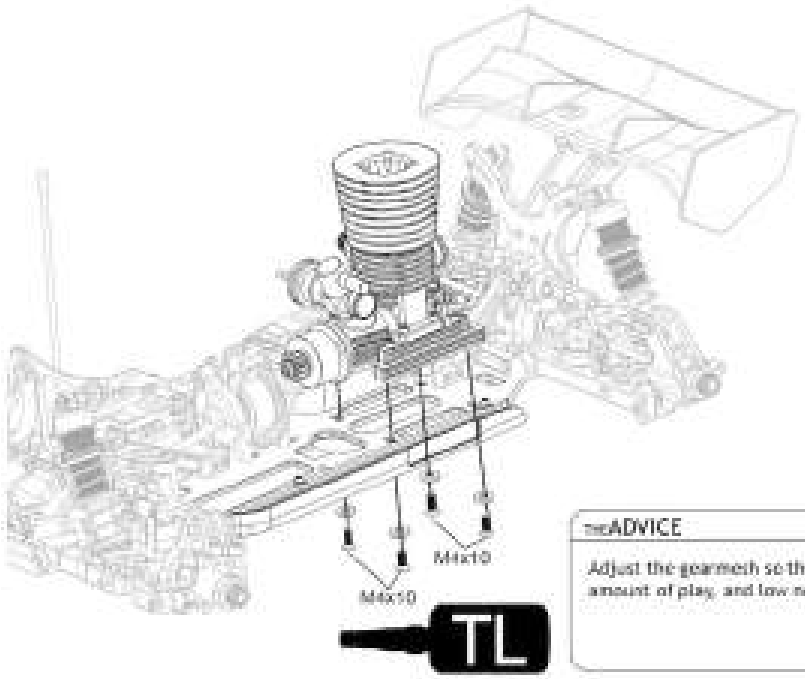

THE ADVICE

Adjust the gearmesh so the gears have a small amount of play, and low noise when spinning.

THE BAG

M

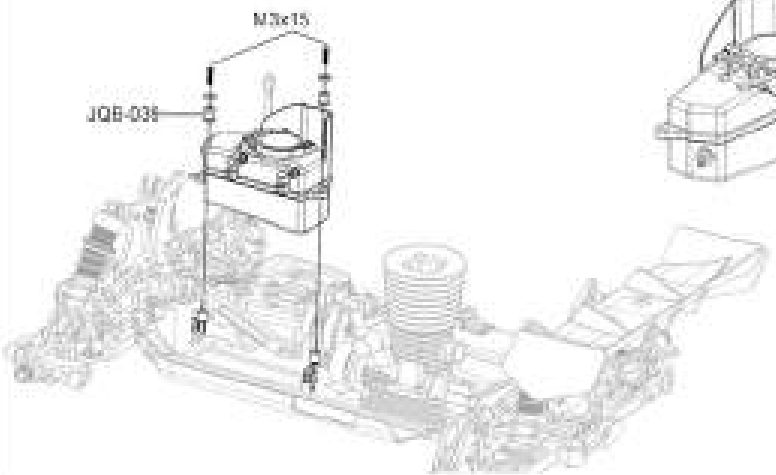

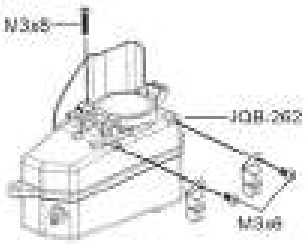

JQB-026	Fueltank posts
JQB-039	Fueltank Grommet
JQB-262	Fueltank, with O-Ring Seal

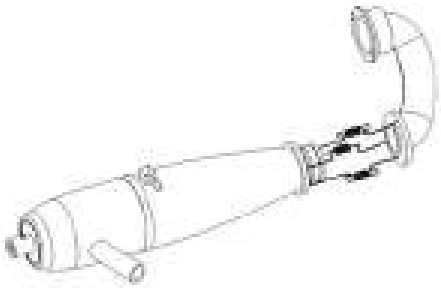

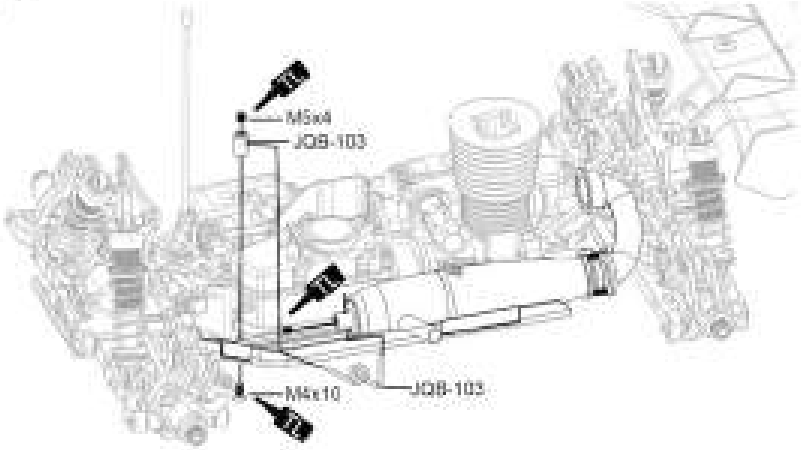

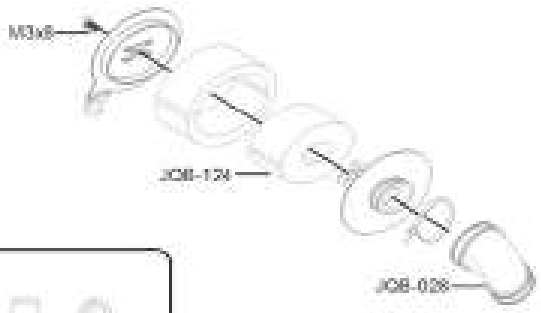

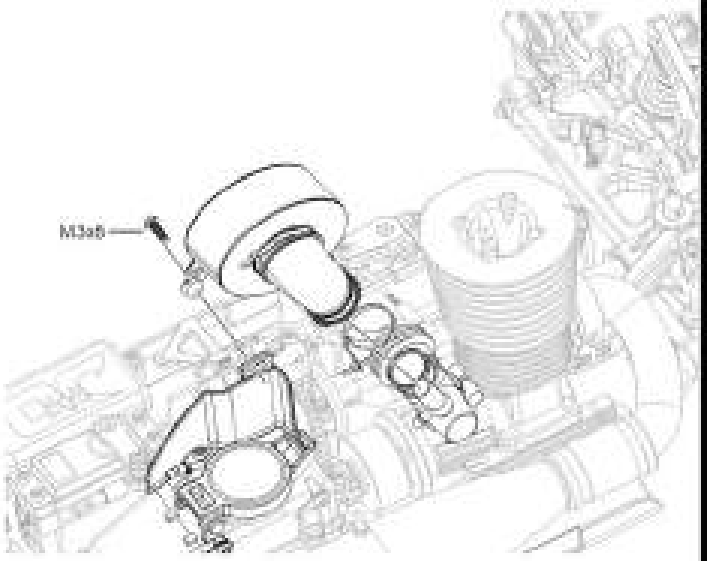

Set M5x4(1)

SFH M4x10(1)

SBH M3x8(1)

SFH M3x8(1)

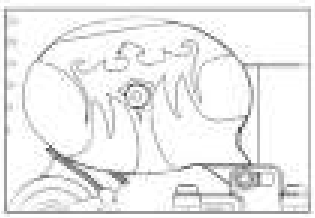

THE BAG

N

JQB-028	Airfilter Holder
JQB-103	Pipe Holder
JQB-124	Airfilter Foam Inner and Outer 4pcs

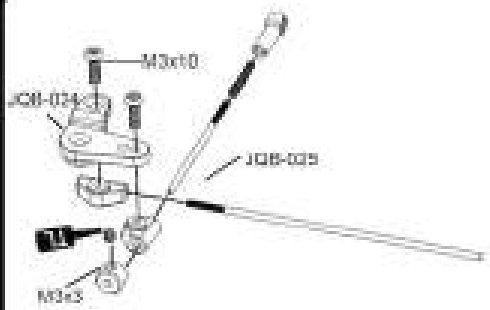

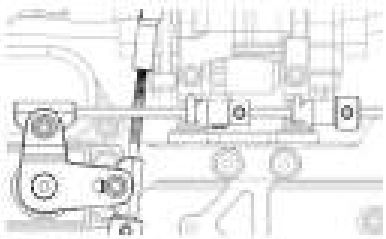

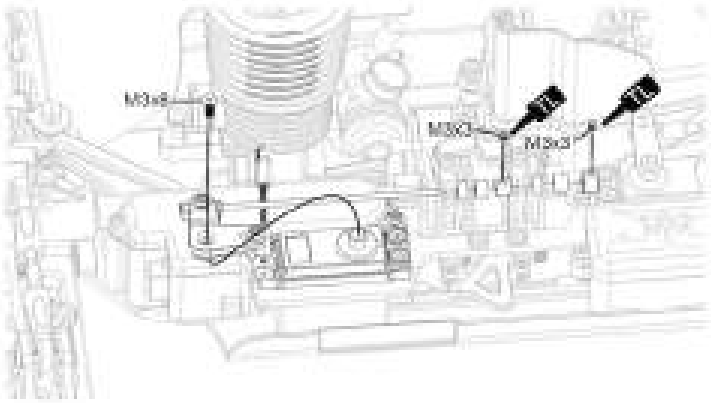

THE ADVICE

Cut a 5mm piece of fueltubing to fit between the ball and the collet. When assembling, gently move the collet towards the lever until the caliper starts pushing on the brakepad, and tighten the setscrew in the collet. Brake bias is set by moving the aluminium collets. A good starting point is a 50/50 bias, where both front and rear wheels brake the same amount. For more steering and a more aggressive feel, try reducing the front brake so it doesnt lock the wheels, and run full lock on the rear.

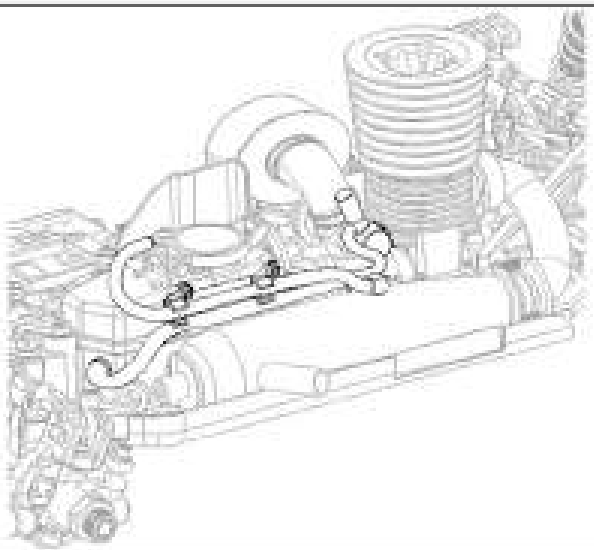

Set M3x3(3)

SBH M3x10(2)

BFH M3x8(1)

THE BAG

0

JQB-024 Servo Arms
JQB-025 Throttle Linkage Kit

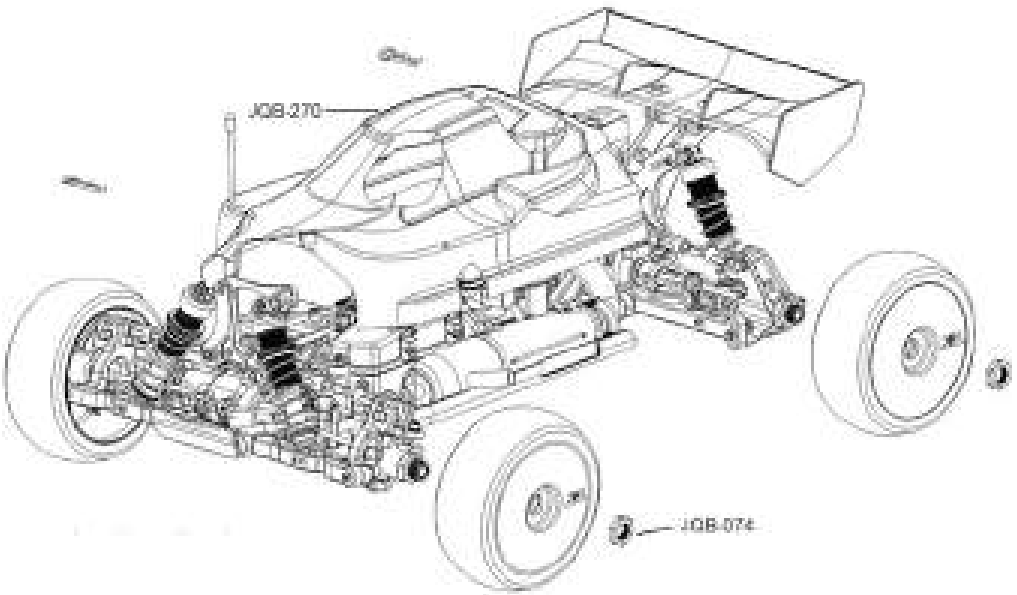

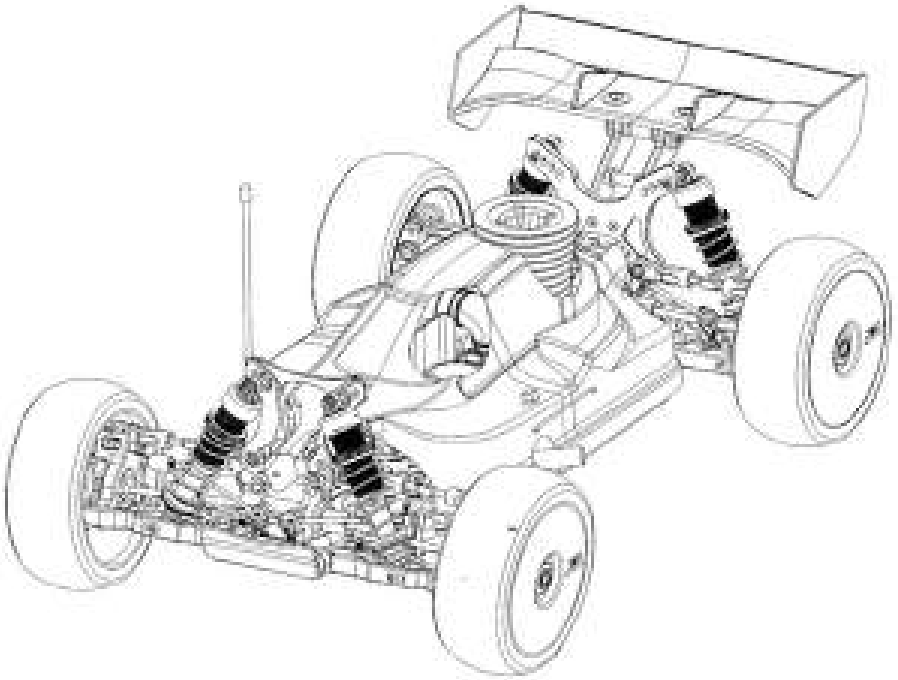

THE BAG

0

JQB-074	Wheel Nuts
JQB-270	THE Body

THE Setup & Driving

Driving THE Car

Depending on what car you have owned before, driving THE Car may be just a bit different, or a lot different. The main things you will notice are:

1. It has a lot of steering and cornerspeed, on and off power.
2. It accelerates well.
3. It has a smooth and light feel to it, it glides over small bumps, and jumps well. Big bumps cause just as much havoc for it, as for other cars.

So what does this mean? Well, I made THE Car so it's possible to set it up to suit whatever driving style you may have. Aggressive and on-power to smooth and coasting in corners with tight lines, everyone will be able to get a good set up.
Two different cars, with very different set ups, can feel like two different cars altogether, unlike some brands' cars, that always have some trait that dominates the feel, no matter what you do to it.

But in order for you to adjust easier to THE Car, and to get the best out of it, here is some advice:

1. It has a lot of steering and cornerspeed, on and off power.

The amount of steering means that you don't need to go full lock to full lock on the steering wheel. Practice driving and turning the wheel just a bit, so then if you need more, you can turn the wheel a bit more and you still have steering. A good way to reduce steering is also to reduce the dualrate on the transmitter.

2 And 3.It accelerates well and has a light feel..

THE Car is light, and has good forward bite. This means that you really don't need to use as much throttle as on other cars. You can if you want, but if you want to be as fast and efficient as possible, you don't need to. Practice driving by rolling on the throttle smoothly, and mostly using about half throttle in corners and technical sections.

THE FINAL WORDS

Improving THE Car. No it isn't perfect.

I believe THE Car to be the best car on the market. Of course I do, otherwise I wouldn't have produced it. I believe that it has the potential to bring out the best in any driver.

However, I know THE Car isn't perfect, it can be improved. I realise some of you will love it. But surely you can think of ways to improve it? I also realise there may be people that don't like it. I specially hope you, the disappointed customer, don't just toss it in the corner, but let us know what it is you don't like. Maybe you have found issues we have missed? If THE Car doesn't handle like you want it to, send over your set-up, picture and description of the track, explanation of what the car is doing wrong, and we will help you make it work right for you. If something is breaking, let us know, if something doesn't fit, let us know, anything at all, let us know.

Together we can make THE Car unbeatable, and more fun for everyone!

http://jq-products.com/